TLV906xS-Q1 Automotive 10-MHz, RRIO, CMOS Operational Amplifiers

1 Features

- AEC-Q100 qualified for automotive applications
  - Temperature grade 1: –40°C to +125°C, T_A
  - Device HBM ESD classification level 3A
  - Device CDM ESD classification level C6
- Rail-to-rail input and output
- Low input offset voltage: ±0.3 mV
- Unity-gain bandwidth: 10 MHz
- Low broadband noise: 10 nV/√ Hz
- Low input bias current: 0.5 pA
- Low quiescent current: 538 µA
- Unity-gain stable
- Internal RFI and EMI filter
- Wide supply range: 1.8 V to 5.5 V
- Easier to stabilize with higher capacitive load due to resistive open-loop output impedance
- Shutdown version: TLV906xS
- Functional Safety-Capable
  - Documentation available to aid functional safety system design

2 Applications

- Optimized for AEC-Q100 grade 1 applications
- Infotainment and cluster
- Passive safety
- Body electronics and lighting
- HEV/EV inverter and motor control
- On-board (OBC) and wireless charger
- Powertrain current sensor
- Advanced driver assistance systems (ADAS)
- Single-supply, low-side, unidirectional current-sensing circuit

3 Description

The TLV9061-Q1 (single), TLV9062-Q1 (dual) and TLV9064-Q1 (quad) are single-, dual- and quad-low-voltage (1.8 V to 5.5 V) operational amplifiers (op amps) with rail-to-rail input- and output-swing capabilities. These devices are cost-effective methods for automotive applications where low-voltage operation, a small footprint, and high capacitive load drive are required. Although the capacitive load drive of the TLV906x-Q1 is 100 pF, the resistive open-loop output impedance makes stabilizing with higher capacitive loads simpler. These op amps are designed specifically for low-voltage operation (1.8 V to 5.5 V) with performance specifications similar to the OPAx316 and TLVx316 devices, and identical to their non-automotive qualified TLV906x counterparts.

Package Information(3)

PART NUMBER(1)	PACKAGE	BODY SIZE (NOM)
TLV9061-Q1	DBV (SOT-23, 5)(2)	1.60 mm × 2.90 mm
	DCK (SC70, 5)	1.25 mm × 2.00 mm
TLV9061S-Q1	DBV (SOT-23, 6)	1.60 mm × 2.90 mm
TLV9062-Q1	D (SOIC, 8)	3.91 mm × 4.90 mm
	PW (TSSOP, 8)(2)	3.00 mm × 4.40 mm
	DGK (VSSOP, 8)	3.00 mm × 3.00 mm
TLV9064-Q1	D (SOIC, 14)	8.65 mm × 3.91 mm
	PW (TSSOP, 14)	4.40 mm × 5.00 mm

(1) For all available packages, see the orderable addendum at the end of the data sheet.
(2) Package is preview only.
(3) See *Device Comparison Table*

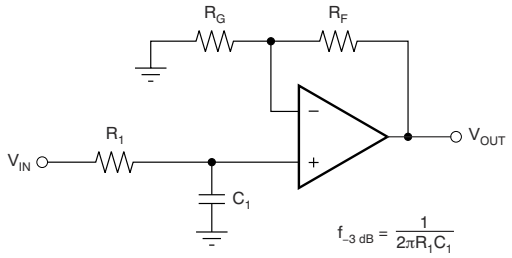

$$\frac{V_{OUT}}{V_{IN}} = \left(1 + \frac{R_F}{R_G}\right)\left(\frac{1}{1 + sR_1C_1}\right)$$

Single-Pole, Low-Pass Filter

Table of Contents

1 Features....1
2 Applications....1
3 Description....1
4 Revision History....2
5 Description (continued)....4
6 Device Comparison Table....4
7 Pin Configuration and Functions....5
8 Specifications....8
8.1 Absolute Maximum Ratings....8
8.2 ESD Ratings....8
8.3 Recommended Operating Conditions....8
8.4 Thermal Information: TLV9061-Q1....9
8.5 Thermal Information: TLV9062-Q1....9
8.6 Thermal Information: TLV9064-Q1....9
8.7 Electrical Characteristics....10
8.8 Typical Characteristics....12
9 Detailed Description....18
9.1 Overview....18
9.2 Functional Block Diagram....18
9.3 Feature Description....19
9.4 Device Functional Modes....19
10 Application and Implementation....20
10.1 Application Information....20
10.2 Typical Applications....20
10.3 Power Supply Recommendations....23
10.4 Layout....24
11 Device and Documentation Support....26
11.1 Documentation Support....26
11.2 Receiving Notification of Documentation Updates....26
11.3 Support Resources....26
11.4 Trademarks....26
11.5 Electrostatic Discharge Caution....26
11.6 Glossary....26
12 Mechanical, Packaging, and Orderable Information....26

4 Revision History

NOTE: Page numbers for previous revisions may differ from page numbers in the current version.

Changes from Revision F (January 2023) to Revision G (April 2023)	Page
• Changed the status of the 5-PIN SC70 (DCK) packages from: *preview* to: *active*	1

Changes from Revision E (February 2021) to Revision F (January 2023)	Page
• Added 5-pin SOT-23 (DBV) and 5-PIN SC70 (DCK) packages to *Device Information* section	1
• Changed the *Description (continued)* section to include TLV9061-Q1	4
• Changed the *Device Comparison Table* to include 5-pin DBV and DCK	4
• Added 5-pin SOT-23 and SC70 to *Pin Configuration and Functions* section	5
• Added 5-pin DBV (SOT-23) and DCK (SC70) to the *Thermal Information: TLV9061-Q1* table	9

Changes from Revision D (October 2020) to Revision E (February 2021)	Page
• Deleted preview note from SOT-23 (6) package from *Device Information* section	1
• Added separate ESD rating for TLV9061S-Q1 in *ESD Ratings* table	8
• Updated DBV (SOT-23) thermal information in *Thermal Information: TLV9061S-Q1* table	9

Changes from Revision C (September 2020) to Revision D (October 2020)	Page
• Added TLV9061-Q1 GPN throughout the data sheet	1

Changes from Revision B (September 2020) to Revision C (September 2020)	Page
• Updated the numbering format for tables, figures, and cross-references throughout the document	1
• Functional Safety-Capable document link added in the *Features* section	1
• Added note 5 to differential input voltage in *Absolute Maximum Ratings* table	8

Changes from Revision A (March 2020) to Revision B (September 2020)	Page
• Deleted preview note from VSSOP (8) and TSSOP (14) package from *Device Information* section	1
• Added thermal information for VSSOP (8) package in *Thermal Information* section	9
• Added thermal information for TSSOP (14) package in *Thermal Information* section	9

Changes from Revision * (April 2019) to Revision A (March 2020)	Page
• First public release of data sheet	1

5 Description (continued)

The TLV906x-Q1 family of devices serve as general-purpose automotive amplifiers for use in low-voltage systems requiring low noise and wide bandwidth or both.

The TLV906x-Q1 family helps simplify system design, because the family is unity-gain stable, integrates the RFI and EMI rejection filter, and provides no phase reversal in overdrive condition.

These devices are available in single-channel (TLV9061-Q1), dual-channel (TLV9062-Q1), and quad-channel (TLV9064-Q1) versions. The single-channel is available in industry standard 5-pin SOT-23, 5-pin SC70 and 6-pin SOT-23 packaging. The 6-pin SOT-23 package features an additional pin for shutdown functionality. Both the dual-channel and quad-channel versions are available in industry standard SOIC and TSSOP packages, with the dual channel also available as a VSSOP.

6 Device Comparison Table

DEVICE	NO. OF CHANNELS	PACKAGE LEADS				
		DBV	DCK	D	DGK	PW
TLV9061-Q1	1	5	5	—	—	—
TLV9061S-Q1	1	6	—	—	—	—
TLV9062-Q1	2	—	—	8	8	8
TLV9064-Q1	4	—	—	14	—	14

7 Pin Configuration and Functions

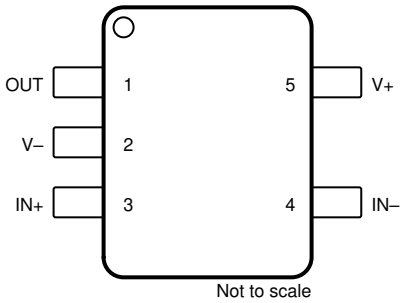

Figure 7-1. TLV9061-Q1 DBV Package, 5-Pin SOT-23 (Top View)

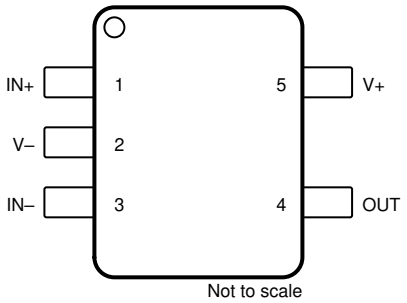

Figure 7-2. TLV9061-Q1 DCK Package, 5-Pin SC70 (Top View)

Table 7-1. Pin Functions: TLV9061-Q1

PIN			TYPE(1)	DESCRIPTION
NAME	DBV	DCK		
+IN	3	1	I	Noninverting input
–IN	4	3	I	Inverting input
OUT	1	4	O	Output
V+	5	5	—	Positive (highest) power supply
V–	2	2	—	Negative (lowest) power supply

(1) I = input, O = output

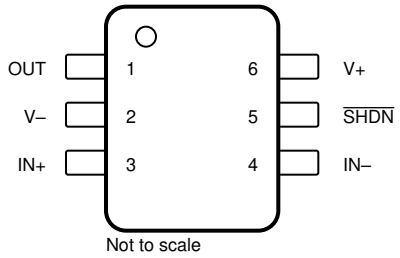

Figure 7-3. TLV9061S-Q1 DBV Package, 6-Pin SOT-23 (Top View)

Table 7-2. Pin Functions: TLV9061S-Q1

PIN		TYPE(1)	DESCRIPTION
NAME	NO.		
IN–	4	I	Inverting input
IN+	3	I	Noninverting input
OUT	1	O	Output
$\overline{\text{SHDN}}$	5	I	Shutdown: low = amp disabled, high = amp enabled. See *Shutdown Function* section for more information.
V–	2	I or —	Negative (lowest) supply or ground (for single-supply operation)
V+	6	I	Positive (highest) supply

(1) I = input, O = output

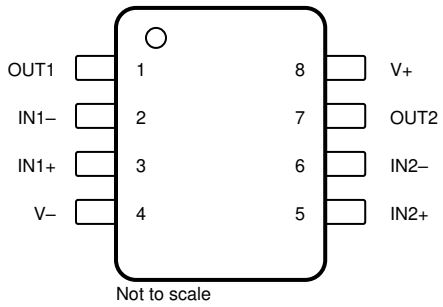

Figure 7-4. TLV9062-Q1 D, DGK, and PW Package, 8-Pin SOIC, VSSOP, and TSSOP (Top View)

Table 7-3. Pin Functions: TLV9062-Q1

PIN		TYPE(1)	DESCRIPTION
NAME	NO.		
IN1–	2	I	Inverting input, channel 1
IN1+	3	I	Noninverting input, channel 1
IN2–	6	I	Inverting input, channel 2
IN2+	5	I	Noninverting input, channel 2
OUT1	1	O	Output, channel 1
OUT2	7	O	Output, channel 2
V–	4	—	Negative (lowest) supply or ground (for single-supply operation)
V+	8	—	Positive (highest) supply

(1) I = input, O = output

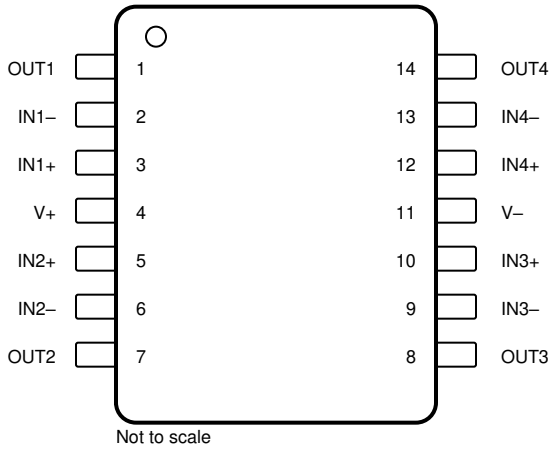

Figure 7-5. TLV9064-Q1 D and PW Package, 14-Pin SOIC and TSSOP (Top View)

Table 7-4. Pin Functions: TLV9064-Q1

PIN		TYPE(1)	DESCRIPTION
NAME	NO.		
IN1–	2	I	Inverting input, channel 1
IN1+	3	I	Noninverting input, channel 1
IN2–	6	I	Inverting input, channel 2
IN2+	5	I	Noninverting input, channel 2
IN3–	9	I	Inverting input, channel 3
IN3+	10	I	Noninverting input, channel 3
IN4–	13	I	Inverting input, channel 4
IN4+	12	I	Noninverting input, channel 4
NC	—	—	No internal connection
OUT1	1	O	Output, channel 1
OUT2	7	O	Output, channel 2
OUT3	8	O	Output, channel 3
OUT4	14	O	Output, channel 4
V–	11	I or —	Negative (lowest) supply or ground (for single-supply operation)
V+	4	I	Positive (highest) supply

(1) I = input, O = output

8 Specifications

8.1 Absolute Maximum Ratings

over operating ambient temperature (unless otherwise noted)[1]

			MIN	MAX	UNIT
Supply voltage [(V+) – (V–)]			0	6	V
Signal input pins	Voltage[2]	Common-mode	(V–) – 0.5	(V+) + 0.5	V
		Differential[5]		(V+) – (V–) + 0.2	V
	Current[2]		–10	10	mA
Output short-circuit[3] [4]			Continuous		mA
Temperature	Specified, T_A		–40	125	°C
	Junction, T_J			150	
	Storage, T_{stg}		–65	150	

(1) Stresses beyond those listed under *Absolute Maximum Ratings* may cause permanent damage to the device. These are stress ratings only, and functional operation of the device at these or any other conditions beyond those indicated under *Recommended Operating Conditions* is not implied. Exposure to absolute-maximum-rated conditions for extended periods may affect device reliability.
(2) Input pins are diode-clamped to the power-supply rails. Current limit input signals that can swing more than 0.5 V beyond the supply rails to 10 mA or less.
(3) Short-circuit to ground, one amplifier per package.
(4) Long term continuous current limit is determined by electromigration limits.
(5) Differential input voltages greater than 0.5 V applied continuously can result in a shift to the input offset voltage above the maximum specification of this parameter. The magnitude of this effect increases as the ambient operating temperature rises.

8.2 ESD Ratings

			VALUE	UNIT
TLV9061S-Q1 PACKAGES				
$V_{(ESD)}$	Electrostatic discharge	Human-body model (HBM), per AEC Q100-002[1]	±2000	V
		Charged-device model (CDM), per AEC Q100-011	±1500	
ALL OTHER PACKAGES				
$V_{(ESD)}$	Electrostatic discharge	Human-body model (HBM), per AEC Q100-002[1]	±4000	V
		Charged-device model (CDM), per AEC Q100-011	±1500	

(1) AEC Q100-002 indicates that HBM stressing shall be in accordance with ANSI/ESDA/JEDEC JS-001 Specification.

8.3 Recommended Operating Conditions

over operating ambient temperature range (unless otherwise noted)

		MIN	MAX	UNIT
V_S	Supply voltage (V_S = [V+] – [V–])	1.8	5.5	V
V_I	Input voltage	(V–) – 0.1	(V+) + 0.1	V
V_O	Output voltage	V–	V+	V
V_{SHDN_IH}	High level input voltage at shutdown pin (amplifier enabled)	1.1	V+	V
V_{SHDN_IL}	Low level input voltage at shutdown pin (amplifier disabled)	V–	0.2	V
T_A	Specified temperature	–40	125	°C

8.4 Thermal Information: TLV9061-Q1

THERMAL METRIC[1]		TLV9061S-Q1	TLV9061-Q1		UNIT
		DBV (SOT-23)	DBV (SOT-23)	DCK (SC70)	
		6 PINS	5 PINS	5 PINS	
$R_{\theta JA}$	Junction-to-ambient thermal resistance	210.9	232.5	246.6	°C/W
$R_{\theta JC(top)}$	Junction-to-case (top) thermal resistance	130.5	131.0	157.5	°C/W
$R_{\theta JB}$	Junction-to-board thermal resistance	91.7	99.6	95.4	°C/W
ψ_{JT}	Junction-to-top characterization parameter	70.1	66.5	68.8	°C/W
ψ_{JB}	Junction-to-board characterization parameter	91.5	99.1	95.0	°C/W

(1) For more information about traditional and new thermal metrics, see the *Semiconductor and IC Package Thermal Metrics* application report.

8.5 Thermal Information: TLV9062-Q1

THERMAL METRIC[1]		TLV9062-Q1			UNIT
		D (SOIC)	DGK (VSSOP)	PW (TSSOP)	
		8 PINS	8 PINS	8 PINS	
$R_{\theta JA}$	Junction-to-ambient thermal resistance	152.0	198.5	TBD	°C/W
$R_{\theta JC(top)}$	Junction-to-case (top) thermal resistance	92.1	87.2	TBD	°C/W
$R_{\theta JB}$	Junction-to-board thermal resistance	95.6	120.3	TBD	°C/W
ψ_{JT}	Junction-to-top characterization parameter	40.1	23.8	TBD	°C/W
ψ_{JB}	Junction-to-board characterization parameter	94.8	118.7	TBD	°C/W

(1) For more information about traditional and new thermal metrics, see *Semiconductor and IC Package Thermal Metrics*.

8.6 Thermal Information: TLV9064-Q1

THERMAL METRIC[1]		TLV9064-Q1		UNIT
		PW (TSSOP)	D (SOIC)	
		14 PINS	14 PINS	
$R_{\theta JA}$	Junction-to-ambient thermal resistance	133.8	111.1	°C/W
$R_{\theta JC(top)}$	Junction-to-case (top) thermal resistance	62.1	67.6	°C/W
$R_{\theta JB}$	Junction-to-board thermal resistance	76.9	67	°C/W
ψ_{JT}	Junction-to-top characterization parameter	13.2	27.4	°C/W
ψ_{JB}	Junction-to-board characterization parameter	76.3	66.6	°C/W

(1) For more information about traditional and new thermal metrics, see *Semiconductor and IC Package Thermal Metrics*.

8.7 Electrical Characteristics

For V_S (total supply voltage) = (V+) – (V–) = 1.8 V to 5.5 V at T_A = 25°C, R_L = 10 kΩ connected to V_S / 2, V_{CM} = V_S / 2, and V_{OUT} = V_S / 2 (unless otherwise noted)

PARAMETER		TEST CONDITIONS	MIN	TYP	MAX	UNIT
OFFSET VOLTAGE						
V_{OS}	Input offset voltage	V_S = 5 V		±0.3	±1.85	mV
		V_S = 5 V, T_A = –40°C to 125°C			±2	
dV_{OS}/dT	Drift	V_S = 5 V, T_A = –40°C to 125°C		±0.53		µV/°C
PSRR	Power-supply rejection ratio	V_S = 1.8 V – 5.5 V, V_{CM} = (V–)		±7	±80	µV/V
	Channel separation, DC	At DC		100		dB
INPUT VOLTAGE RANGE						
V_{CM}	Common-mode voltage range	V_S = 1.8 V to 5.5 V	(V–) – 0.1		(V+) + 0.1	V
CMRR	Common-mode rejection ratio	V_S = 5.5 V, (V–) – 0.1 V < V_{CM} < (V+) – 1.4 V T_A = –40°C to 125°C	80	103		dB
		V_S = 5.5 V, V_{CM} = –0.1 V to 5.6 V T_A = –40°C to 125°C	57	75		
		V_S = 1.8 V, (V–) – 0.1 V < V_{CM} < (V+) – 1.4 V, T_A = –40°C to 125°C		88		
		V_S = 1.8 V, V_{CM} = –0.1 V to 1.9 V T_A = –40°C to 125°C		70		
INPUT BIAS CURRENT						
I_B	Input bias current			±5		pA
I_{OS}	Input offset current			±5		pA
NOISE						
E_n	Input voltage noise (peak-to-peak)	V_S = 5 V, f = 0.1 Hz to 10 Hz		4.77		$µV_{PP}$
e_n	Input voltage noise density	V_S = 5 V, f = 10 kHz		10		nV/√Hz
		V_S = 5 V, f = 1 kHz		16		
i_n	Input current noise density	f = 1 kHz		23		fA/√Hz
INPUT CAPACITANCE						
C_{ID}	Differential			2		pF
C_{IC}	Common-mode			4		pF
OPEN-LOOP GAIN						
A_{OL}	Open-loop voltage gain	V_S = 1.8 V, (V–) + 0.04 V < V_O < (V+) – 0.04 V, R_L = 10 kΩ		100		dB
		V_S = 5.5 V, (V–) + 0.05 V < V_O < (V+) – 0.05 V, R_L = 10 kΩ	104	130		
		V_S = 1.8 V, (V–) + 0.06 V < V_O < (V+) – 0.06 V, R_L = 2 kΩ		100		
		V_S = 5.5 V, (V–) + 0.15 V < V_O < (V+) – 0.15 V, R_L = 2 kΩ		130		
FREQUENCY RESPONSE						
GBP	Gain bandwidth product	V_S = 5 V, G = +1		10		MHz
$φ_m$	Phase margin	V_S = 5 V, G = +1		55		°
SR	Slew rate	V_S = 5 V, G = +1		6.5		V/µs
t_S	Settling time	To 0.1%, V_S = 5 V, 2-V step , G = +1, C_L = 100 pF		0.5		µs
		To 0.01%, V_S = 5 V, 2-V step, G = +1, C_L = 100 pF		1		
t_{OR}	Overload recovery time	V_S = 5 V, V_{IN} × gain > V_S		0.2		µs
THD + N	Total harmonic distortion + noise[(1)]	V_S = 5.5 V, V_{CM} = 2.5 V, V_O = 1 V_{RMS}, G = +1, f = 1 kHz		0.0008%		
OUTPUT						
V_O	Voltage output swing from supply rails	V_S = 5.5 V, R_L = 10 kΩ			20	mV
		V_S = 5.5 V, R_L = 2 kΩ			60	
I_{SC}	Short-circuit current	V_S = 5 V		±50		mA

8.7 Electrical Characteristics (continued)

For V_S (total supply voltage) = (V+) – (V–) = 1.8 V to 5.5 V at T_A = 25°C, R_L = 10 kΩ connected to V_S / 2, V_{CM} = V_S / 2, and V_{OUT} = V_S / 2 (unless otherwise noted)

PARAMETER		TEST CONDITIONS	MIN	TYP	MAX	UNIT
Z_O	Open-loop output impedance	V_S = 5 V, f = 10 MHz		100		Ω
POWER SUPPLY						
I_Q	Quiescent current per amplifier	V_S = 5.5 V, I_O = 0 mA		538	750	µA
		V_S = 5.5 V, I_O = 0 mA T_A = –40°C to 125°C			800	
SHUTDOWN (2)						
I_{QSD}	Quiescent current per amplifier	V_S = 1.8 V to 5.5 V, all amplifiers disabled, $\overline{SHDN}$ = Low		0.5	1.5	µA
Z_{SHDN}	Output impedance during shutdown	V_S = 1.8 V to 5.5 V, amplifier disabled		10 || 8		GΩ || pF
$V_{SHDN_THR_HI}$	High level voltage shutdown threshold (amplifier enabled)	V_S = 1.8 V to 5.5 V		(V–) + 0.9	(V–) + 1.1	V
$V_{SDHN_THR_LO}$	Low level voltage shutdown threshold (amplifier disabled)	V_S = 1.8 V to 5.5 V	(V–) + 0.2	(V–) + 0.7		V
t_{ON}	Amplifier enable time (shutdown)(3)	V_S = 1.8 V to 5.5 V, full shutdown; G = 1, V_{OUT} = 0.9 × V_S / 2, R_L connected to V–		10		µs
t_{OFF}	Amplifier disable time(3)	V_S = 1.8 V to 5.5 V, G = 1, V_{OUT} = 0.1 × V_S / 2, R_L connected to V–		0.6		µs
	$\overline{SHDN}$ pin input bias current (per pin)	V_S = 1.8 V to 5.5 V, V+ ≥ $\overline{SHDN}$ ≥ (V+) – 0.8 V		130		pA
		V_S = 1.8 V to 5.5 V, V– ≤ $\overline{SHDN}$ ≤ V– + 0.8 V		40		

(1) Third-order filter; bandwidth = 80 kHz at –3 dB.
(2) Ensured by design and characterization; not production tested.
(3) Disable time (t_{OFF}) and enable time (t_{ON}) are defined as the time interval between the 50% point of the signal applied to the $\overline{SHDN}$ pin and the point at which the output voltage reaches the 10% (disable) or 90% (enable) level.

8.8 Typical Characteristics

at T_A = 25°C, V_S = 5.5 V, R_L = 10 kΩ connected to V_S / 2, V_{CM} = V_S / 2, and V_{OUT} = V_S / 2 (unless otherwise noted)

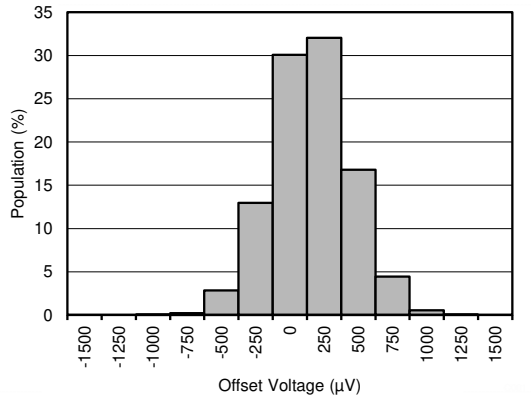

Figure 8-1. Offset Voltage Production Distribution

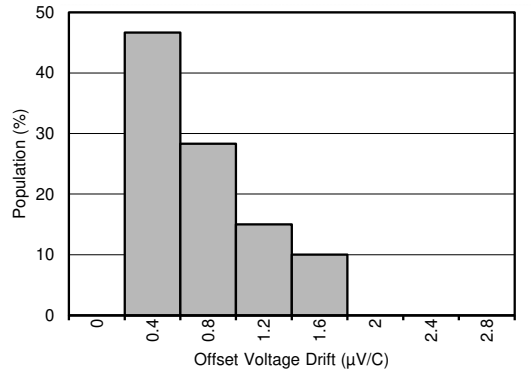

T_A = –40°C to 125°C

Figure 8-2. Offset Voltage Drift Distribution

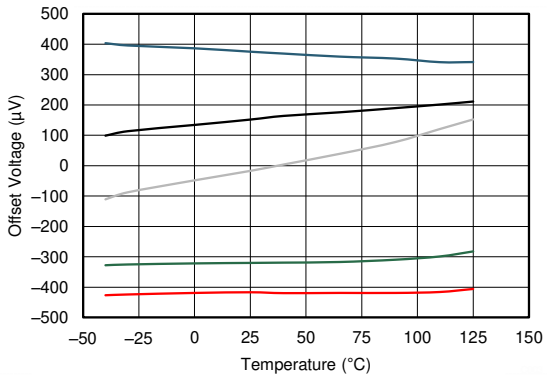

Figure 8-3. Offset Voltage vs Temperature

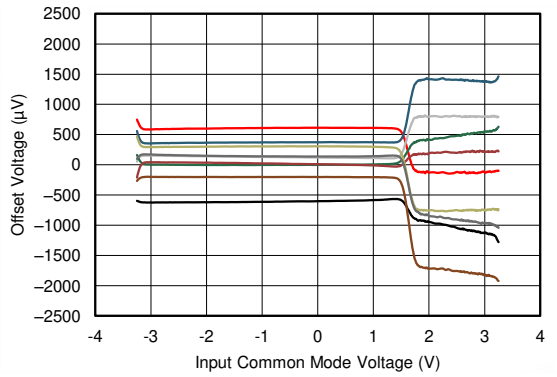

V+ = 2.75 V V– = –2.75 V

Figure 8-4. Offset Voltage vs Common-Mode Voltage

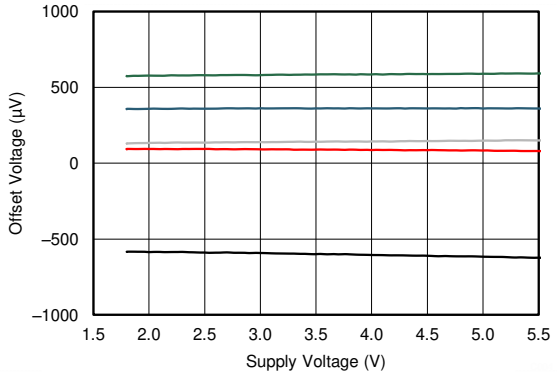

V_S = 1.8 V to 5.5 V

Figure 8-5. Offset Voltage vs Power Supply

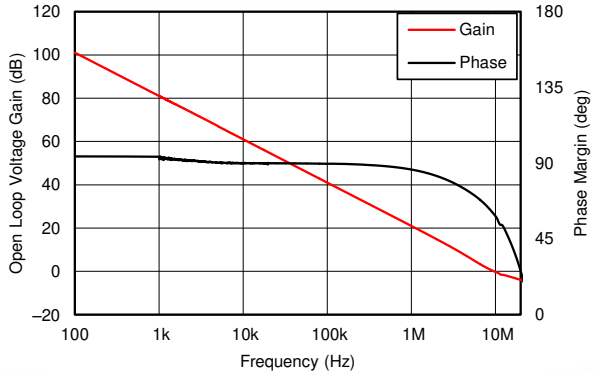

C_L = 10 pF

Figure 8-6. Open-Loop Gain and Phase vs Frequency

8.8 Typical Characteristics (continued)

at T_A = 25°C, V_S = 5.5 V, R_L = 10 kΩ connected to V_S / 2, V_{CM} = V_S / 2, and V_{OUT} = V_S / 2 (unless otherwise noted)

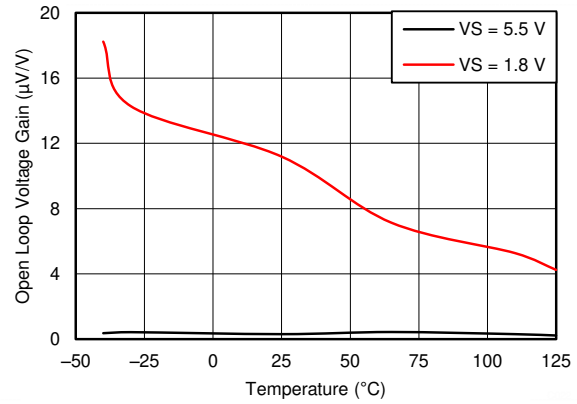

R_L = 2 kΩ

Figure 8-7. Open-Loop Gain vs Temperature

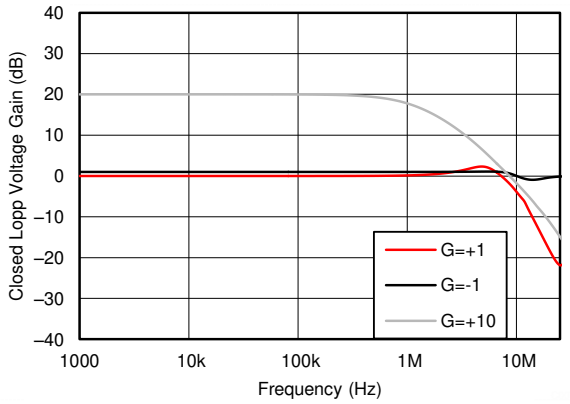

Figure 8-8. Closed-Loop Gain vs Frequency

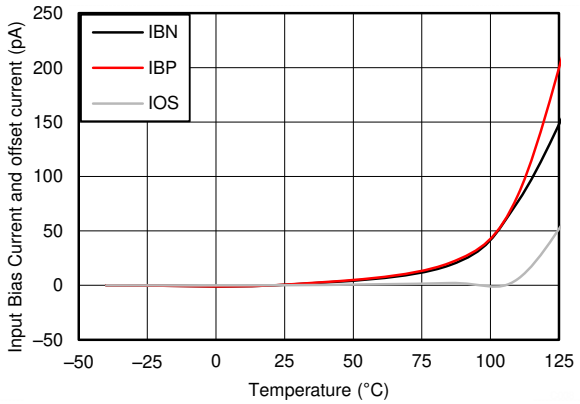

Figure 8-9. Input Bias Current vs Temperature

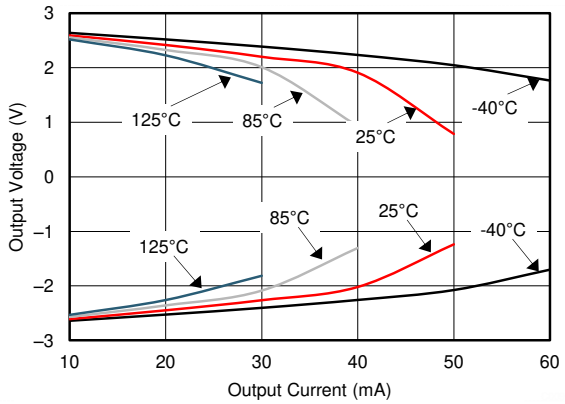

V+ = 2.75 V V– = –2.75 V

Figure 8-10. Output Voltage Swing vs Output Current

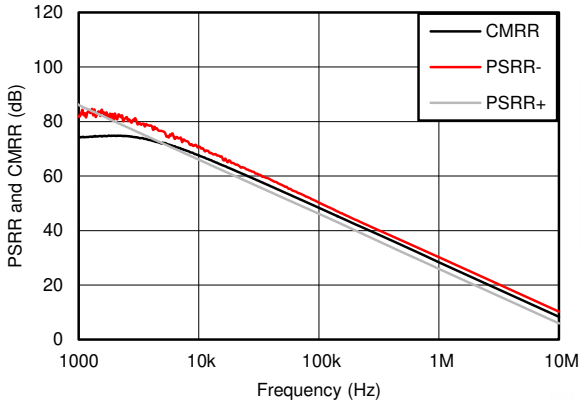

Figure 8-11. CMRR and PSRR vs Frequency (Referred to Input)

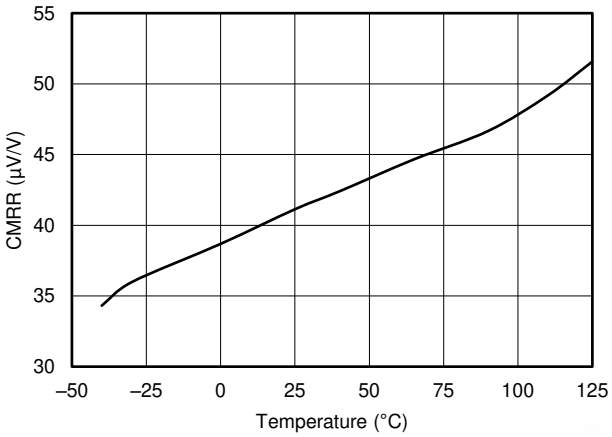

V_S = 5.5 V V_{CM} = –0.1 V to 5.6 V T_A= –40°C to 125°C
R_L= 10 kΩ

Figure 8-12. CMRR vs Temperature

8.8 Typical Characteristics (continued)

at T_A = 25°C, V_S = 5.5 V, R_L = 10 kΩ connected to V_S / 2, V_{CM} = V_S / 2, and V_{OUT} = V_S / 2 (unless otherwise noted)

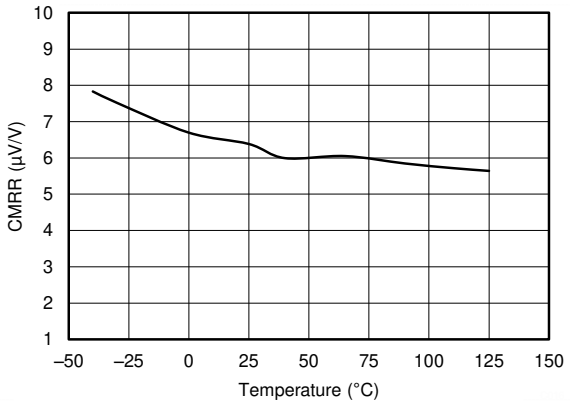

V_{CM} = (V–) – 0.1 V to (V+) – 1.4 V
T_A= –40°C to 125°C R_L= 10 kΩ V_S = 5.5 V

Figure 8-13. CMRR vs Temperature

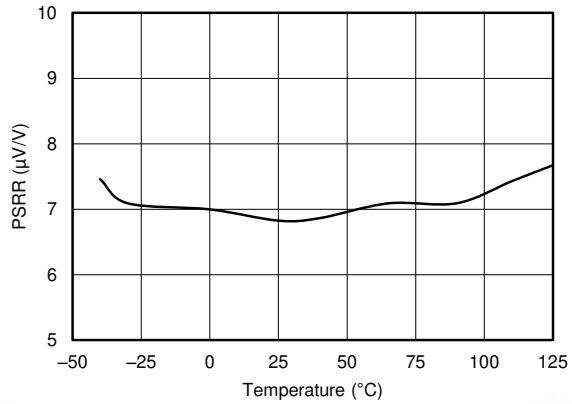

V_S = 1.8 V to 5.5 V

Figure 8-14. PSRR vs Temperature

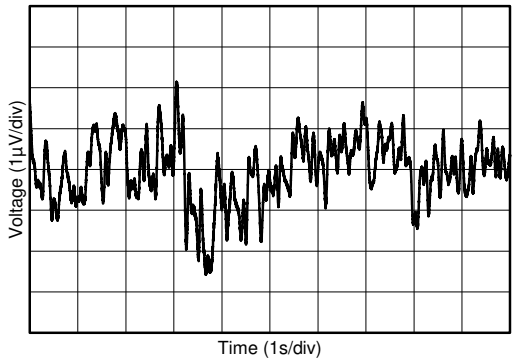

V_S = 1.8 V to 5.5 V

Figure 8-15. 0.1-Hz to 10-Hz Input Voltage Noise

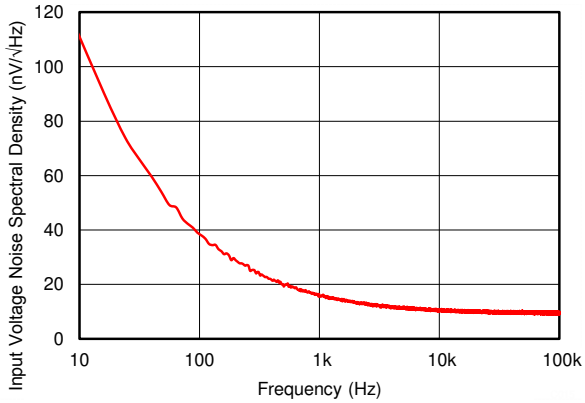

Figure 8-16. Input Voltage Noise Spectral Density vs Frequency

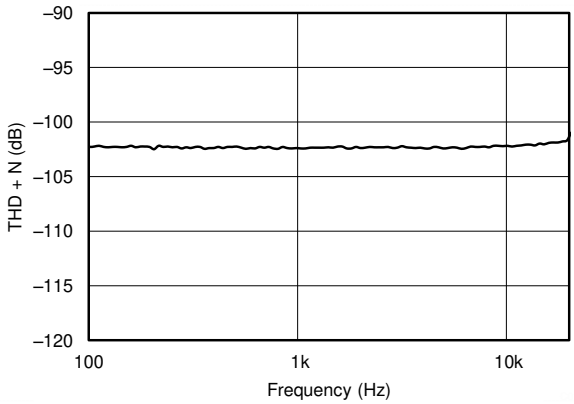

V_S = 5.5 V V_{CM} = 2.5 V R_L = 2 kΩ
V_{OUT} = 0.5 V_{RMS} BW = 80 kHz G = +1

Figure 8-17. THD + N vs Frequency

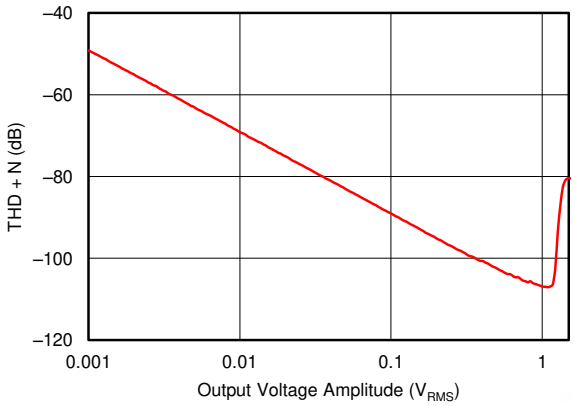

V_S = 5.5 V R_L = 2 kΩ G = +1
V_{CM} = 2.5 V BW = 80 kHz f = 1 kHz

Figure 8-18. THD + N vs Amplitude

8.8 Typical Characteristics (continued)

at T_A = 25°C, V_S = 5.5 V, R_L = 10 kΩ connected to V_S / 2, V_{CM} = V_S / 2, and V_{OUT} = V_S / 2 (unless otherwise noted)

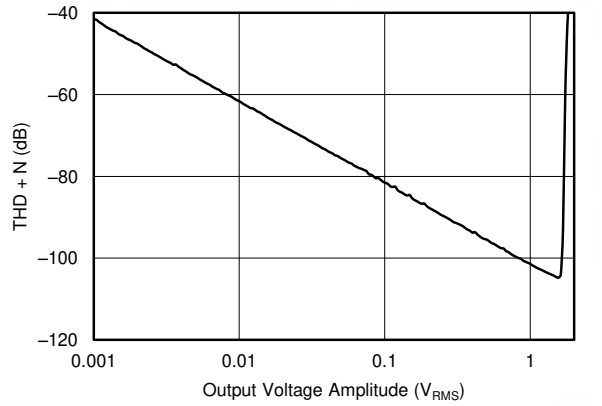

V_S = 5.5 V V_{CM} = 2.5 V R_L = 2 kΩ
G = –1 BW = 80 kHz f = 1 kHz

Figure 8-19. THD + N vs Amplitude

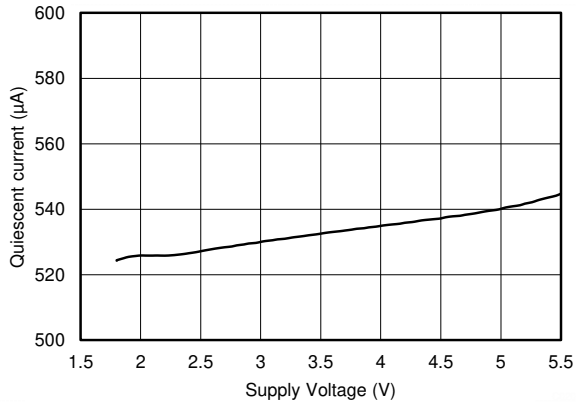

Figure 8-20. Quiescent Current vs Supply Voltage

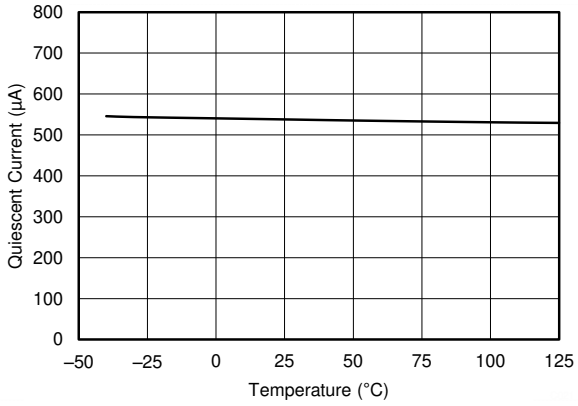

Figure 8-21. Quiescent Current vs Temperature

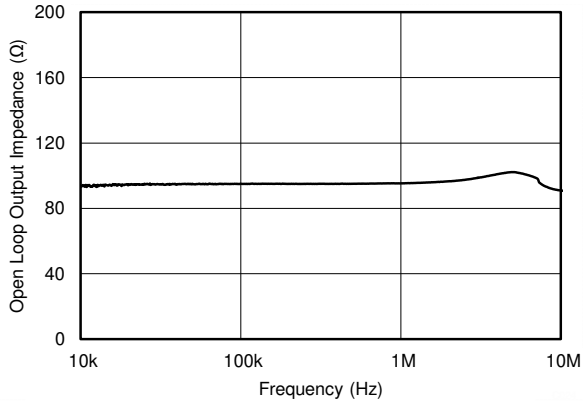

Figure 8-22. Open-Loop Output Impedance vs Frequency

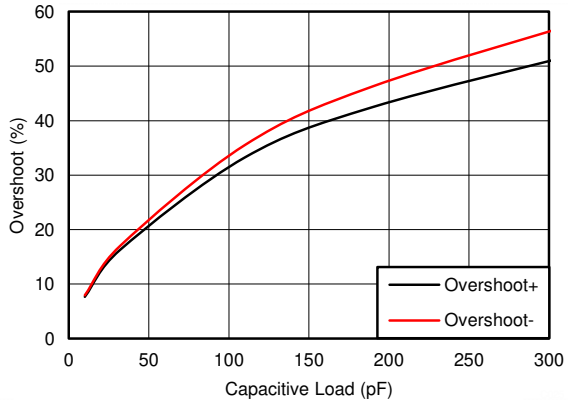

V+ = 2.75 V V– = –2.75 V G = +1 V/V
V_{OUT} step = 100 mV_{p-p} R_L = 10 kΩ

Figure 8-23. Small-Signal Overshoot vs Load Capacitance

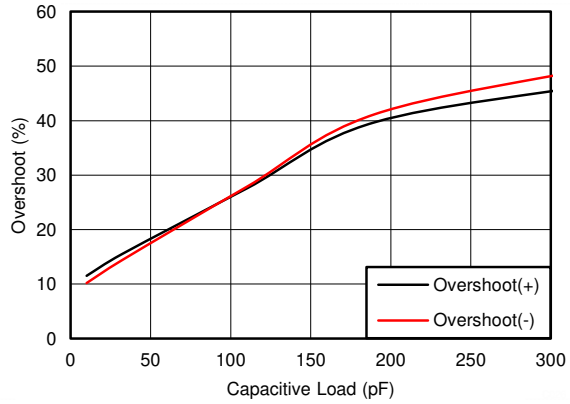

V+ = 2.75 V V– = –2.75 V G = –1 V/V
V_{OUT} step = 100 mV_{p-p} R_L = 10 kΩ

Figure 8-24. Small-Signal Overshoot vs Load Capacitance

8.8 Typical Characteristics (continued)

at T_A = 25°C, V_S = 5.5 V, R_L = 10 kΩ connected to V_S / 2, V_{CM} = V_S / 2, and V_{OUT} = V_S / 2 (unless otherwise noted)

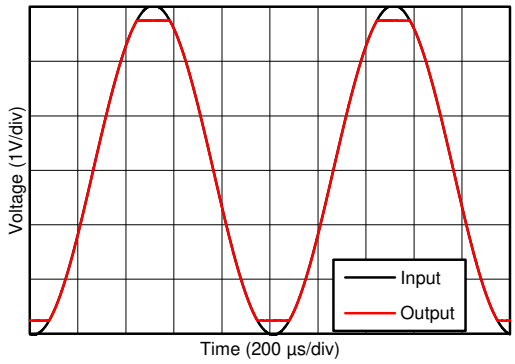

V+ = 2.75 V V– = –2.75 V

Figure 8-25. No Phase Reversal

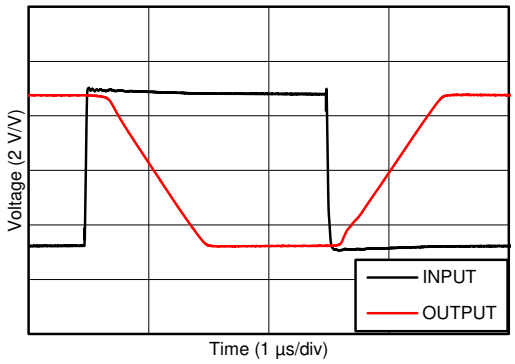

V+ = 2.75 V V– = –2.75 V G = –10 V/V

Figure 8-26. Overload Recovery

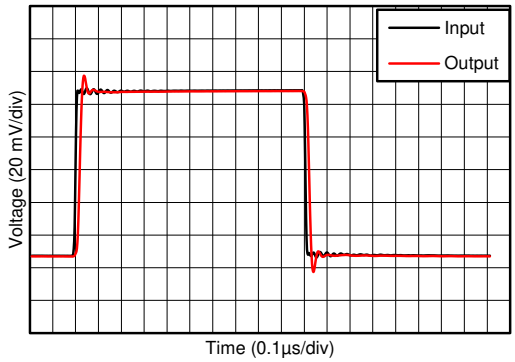

V+ = 2.75 V V– = –2.75 V G = 1 V/V

Figure 8-27. Small-Signal Step Response

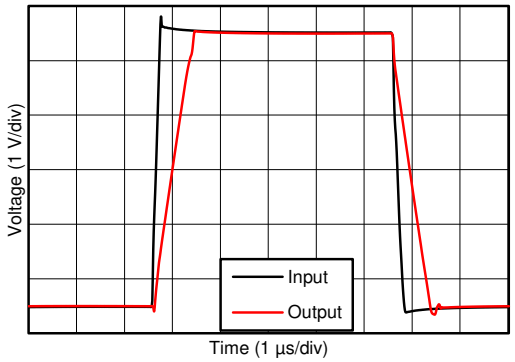

V+ = 2.75 V V– = –2.75 V C_L = 100 pF
G = 1 V/V

Figure 8-28. Large-Signal Step Response

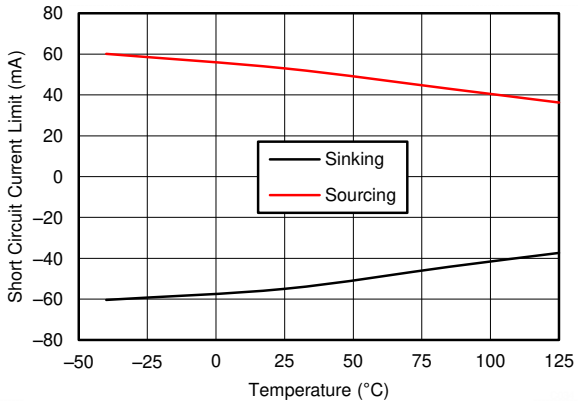

Figure 8-29. Short-Circuit Current vs Temperature

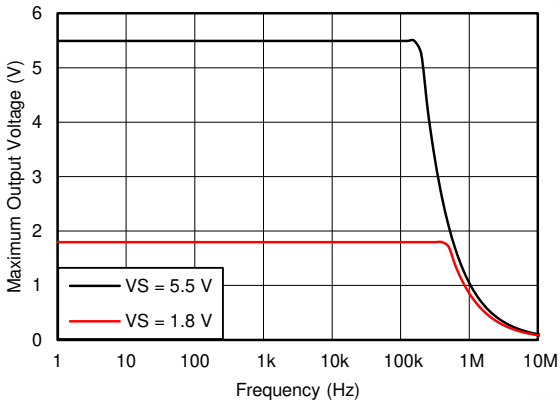

R_L = 10 kΩ C_L = 10 pF

Figure 8-30. Maximum Output Voltage vs Frequency and Supply Voltage

8.8 Typical Characteristics (continued)

at T_A = 25°C, V_S = 5.5 V, R_L = 10 kΩ connected to V_S / 2, V_{CM} = V_S / 2, and V_{OUT} = V_S / 2 (unless otherwise noted)

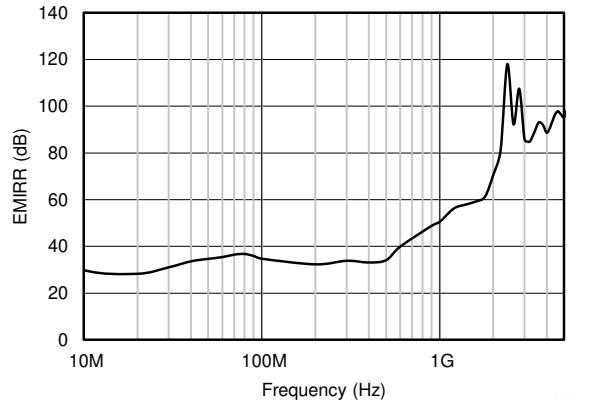

P_{RF} = –10 dBm

Figure 8-31. Electromagnetic Interference Rejection Ratio Referred to Noninverting Input (EMIRR+) vs Frequency

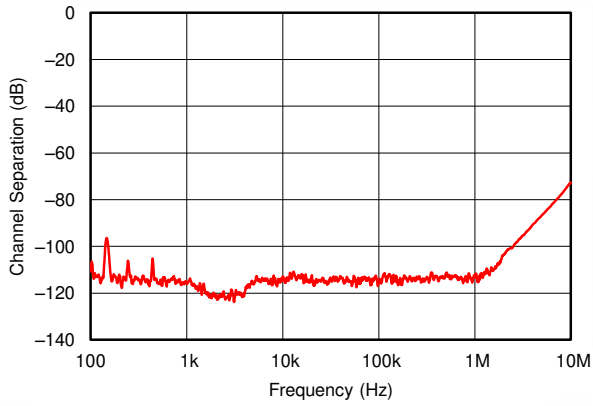

V+ = 2.75 V V– = –2.75 V

Figure 8-32. Channel Separation vs Frequency

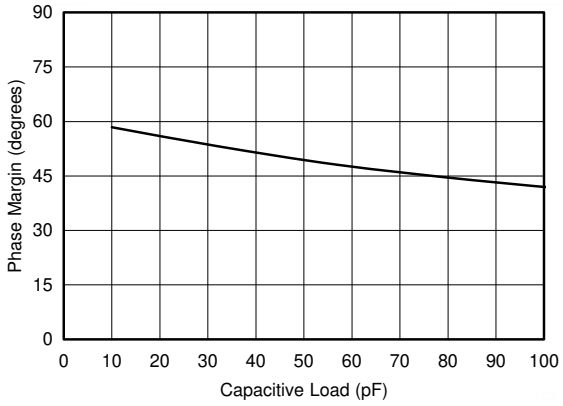

V_S = 5.5 V

Figure 8-33. Phase Margin vs Capacitive Load

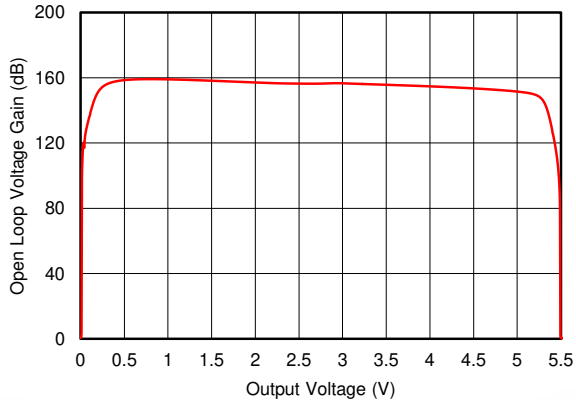

V_S = 5.5 V

Figure 8-34. Open Loop Voltage Gain vs Output Voltage

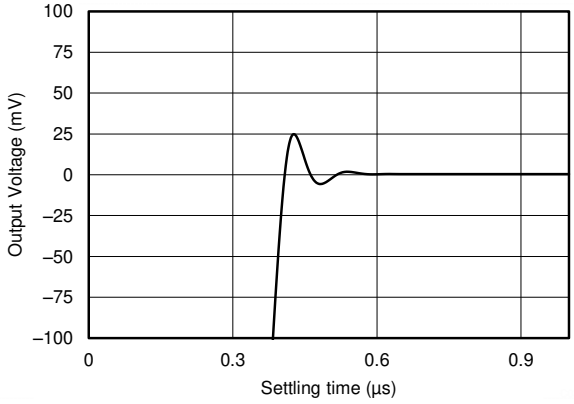

Figure 8-35. Large Signal Settling Time (Positive)

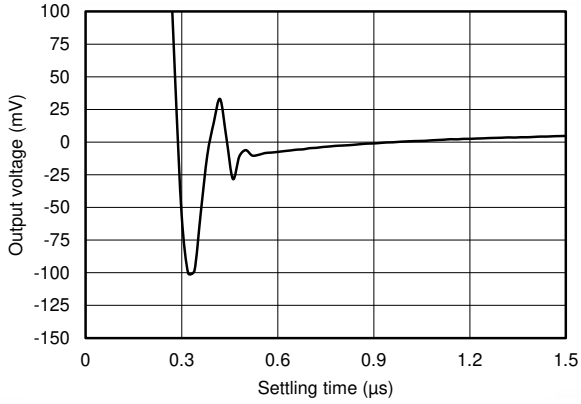

Figure 8-36. Large Signal Settling Time (Negative)

9 Detailed Description

9.1 Overview

The TLV906x-Q1 devices are a family of low-power, rail-to-rail input and output op amps. These devices operate from 1.8 V to 5.5 V, are unity-gain stable, and are designed for a wide range of general-purpose applications. The input common-mode voltage range includes both rails and allows the TLV906x-Q1 series to be used in virtually any single-supply application. Rail-to-rail input and output swing significantly increases dynamic range, especially in low-supply applications. The high bandwidth enables this family to drive the sample-hold circuitry of analog-to-digital converters (ADCs).

9.2 Functional Block Diagram

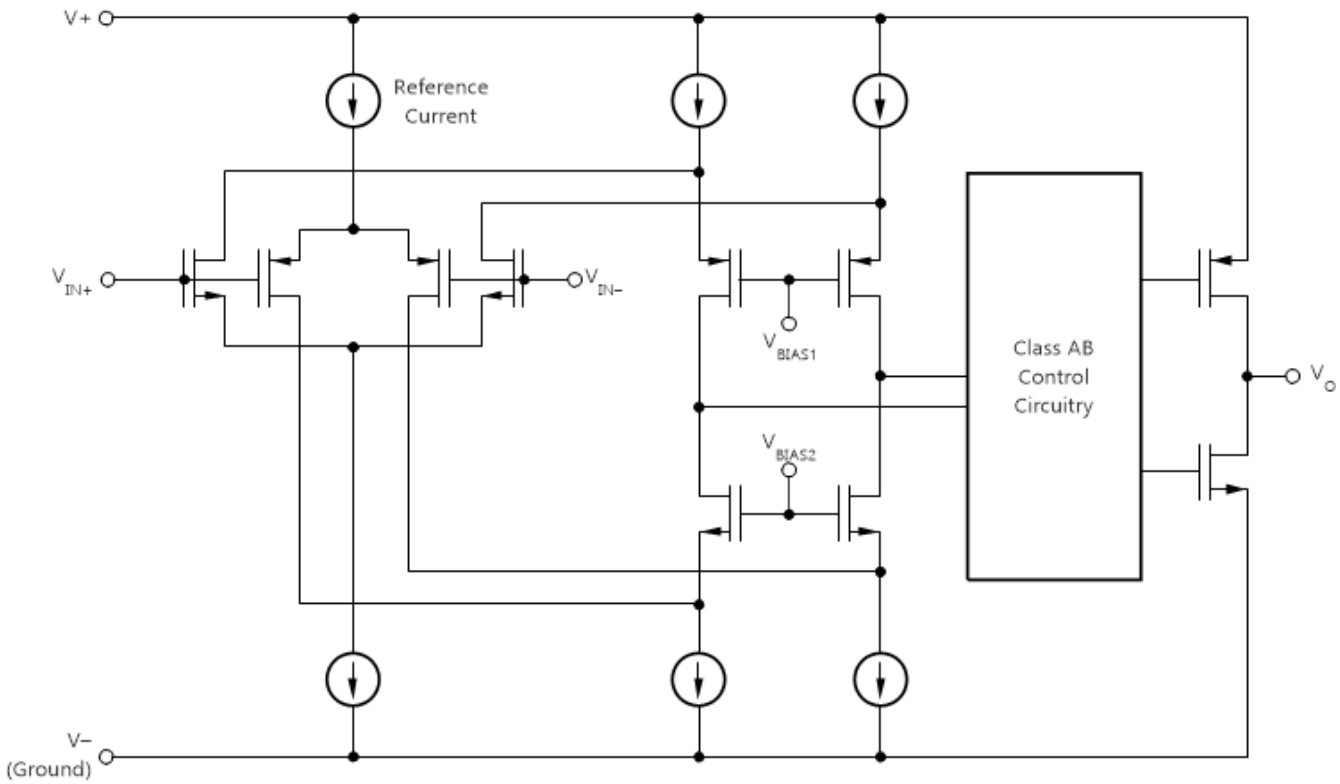

9.3 Feature Description

9.3.1 Rail-to-Rail Input

The input common-mode voltage range of the TLV906x-Q1 family extends 100 mV beyond the supply rails for the full supply voltage range of 1.8 V to 5.5 V. This performance is achieved with a complementary input stage: an N-channel input differential pair in parallel with a P-channel differential pair, as shown in the *Functional Block Diagram* section. The N-channel pair is active for input voltages close to the positive rail, typically (V+) – 1.4 V to 200 mV above the positive supply, whereas the P-channel pair is active for inputs from 200 mV below the negative supply to approximately (V+) – 1.4 V. There is a small transition region, typically (V+) – 1.2 V to (V+) – 1 V, in which both pairs are on. This 200-mV transition region can vary up to 200 mV with process variation. Thus, the transition region (with both stages on) can range from (V+) – 1.4 V to (V+) – 1.2 V on the low end, and up to (V+) – 1 V to (V+) – 0.8 V on the high end. Within this transition region, PSRR, CMRR, offset voltage, offset drift, and THD can degrade compared to device operation outside this region.

9.3.2 Rail-to-Rail Output

Designed as a low-power, low-voltage operational amplifier, the TLV906x-Q1 series delivers a robust output drive capability. A class AB output stage with common-source transistors achieves full rail-to-rail output swing capability. For resistive loads of 10-kΩ, the output swings to within 15 mV of either supply rail, regardless of the applied power-supply voltage. Different load conditions change the ability of the amplifier to swing close to the rails.

9.3.3 Overload Recovery

Overload recovery is defined as the time required for the operational amplifier output to recover from a saturated state to a linear state. The output devices of the operational amplifier enter a saturation region when the output voltage exceeds the rated operating voltage, because of the high input voltage or the high gain. After the device enters the saturation region, the charge carriers in the output devices require time to return to the linear state. After the charge carriers return to the linear state, the device begins to slew at the specified slew rate. Therefore, the propagation delay (in case of an overload condition) is the sum of the overload recovery time and the slew time. The overload recovery time for the TLV906x-Q1 family is approximately 200 ns.

9.3.4 Shutdown Function

The TLV906xS-Q1 devices feature $\overline{\text{SHDN}}$ pins that disable the op amp, placing the op amp into a low-power standby mode. In this mode, the op amp typically consumes less than 1 µA. The $\overline{\text{SHDN}}$ pins are active-low, meaning that shutdown mode is enabled when the input to the $\overline{\text{SHDN}}$ pin is a valid logic low.

The $\overline{\text{SHDN}}$ pins are referenced to the negative supply voltage of the op amp. The threshold of the shutdown feature lies around 800 mV (typical) and does not change with respect to the supply voltage. Hysteresis has been included in the switching threshold to maintain smooth switching characteristics. To make sure of excellent shutdown behavior, the $\overline{\text{SHDN}}$ pins must be driven with valid logic signals. A valid logic low is defined as a voltage between V– and V– + 0.2 V. A valid logic high is defined as a voltage between V– + 1.2 V and V+. The shutdown pin must either be connected to a valid high or a low voltage or driven, and not left as an open circuit.

The $\overline{\text{SHDN}}$ pins are high-impedance CMOS inputs. Dual op amp versions are independently controlled, and quad op amp versions are controlled in pairs with logic inputs. For battery-operated applications, this feature can be used to greatly reduce the average current and extend battery life. The enable time is 10 µs for full shutdown of all channels; disable time is 3 µs. When disabled, the output assumes a high-impedance state. This architecture allows the TLV906xS-Q1 to be operated as a gated amplifier (or to have the device output multiplexed onto a common analog output bus). Shutdown time (t_{OFF}) depends on loading conditions and increases as load resistance increases. To make sure of shutdown (disable) within a specific shutdown time, the specified 10-kΩ load to midsupply (V_S / 2) is required. If using the TLV906xS-Q1 without a load, then the resulting turnoff time is significantly increased.

9.4 Device Functional Modes

Devices in the TLV906x-Q1 family are operational when the power-supply voltage is between 1.8 V (±0.9 V) and 5.5 V (±2.75 V). The TLV906xS devices feature a shutdown mode and are shut down when a valid logic low is applied to the shutdown pin.

10 Application and Implementation

Note

Information in the following applications sections is not part of the TI component specification, and TI does not warrant its accuracy or completeness. TI's customers are responsible for determining suitability of components for their purposes, as well as validating and testing their design implementation to confirm system functionality.

10.1 Application Information

The TLV906x-Q1 family features 10-MHz bandwidth and 6.5-V/µs slew rate with only 538 µA of supply current per channel, providing good AC performance at very low power consumption. DC applications are well served with a very low input noise voltage of 10 nV/√ Hz at 10 kHz, low input bias current, and a typical input offset voltage of 0.3 mV.

10.2 Typical Applications

10.2.1 Typical Low-Side Current Sense Application

Figure 10-1 shows the TLV906x-Q1 configured in a low-side current-sensing application.

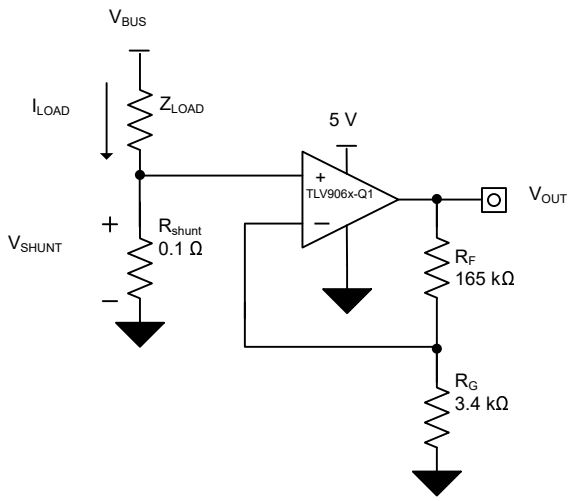

Figure 10-1. TLV906x-Q1 in a Low-Side, Current-Sensing Application

10.2.1.1 Design Requirements

The design requirements for this design are:

- Load current: 0 A to 1 A
- Output voltage: 4.95 V
- Maximum shunt voltage: 100 mV

10.2.1.2 Detailed Design Procedure

The transfer function of the circuit in Figure 10-1 is given in Equation 1.

$$V_{OUT} = I_{LOAD} \times R_{SHUNT} \times GAIN \tag{1}$$

The load current (I_{LOAD}) produces a voltage drop across the shunt resistor (R_{SHUNT}). The load current is set from 0 A to 1 A. To keep the shunt voltage below 100 mV at maximum load current, the largest shunt resistor is defined using Equation 2.

$$R_{SHUNT} = \frac{V_{SHUNT_MAX}}{I_{LOAD_MAX}} = \frac{100\,mV}{1\,A} = 100\,m\Omega \tag{2}$$

Using Equation 2, R_{SHUNT} equals 100 mΩ. The voltage drop produced by I_{LOAD} and R_{SHUNT} is amplified by the TLV906x-Q1 to produce an output voltage of approximately 0 V to 4.95 V. Equation 3 calculates the gain required for the TLV906x-Q1 to produce the required output voltage.

$$Gain = \frac{(V_{OUT_MAX} - V_{OUT_MIN})}{(V_{IN_MAX} - V_{IN_MIN})} \tag{3}$$

Using Equation 3, the required gain equals 49.5 V/V, which is set with the R_F and R_G resistors. Equation 4 sizes the R_F and R_G, resistors to set the gain of the TLV906x-Q1 to 49.5 V/V.

$$Gain = 1 + \frac{(R_F)}{(R_G)} \tag{4}$$

Selecting R_F to equal 165 kΩ and R_G to equal 3.4 kΩ provides a combination that equals approximately 49.5 V/V. Figure 10-2 shows the measured transfer function of the circuit shown in Figure 10-1. Notice that the gain is only a function of the feedback and gain resistors. This gain is adjusted by varying the ratio of the resistors and the actual resistor values are determined by the impedance levels that the designer wants to establish. The impedance level determines the current drain, the effect that stray capacitance has, and a few other behaviors. There is no best impedance selection that works for every system; you must choose an impedance that is best for your system parameters.

10.2.1.3 Application Curve

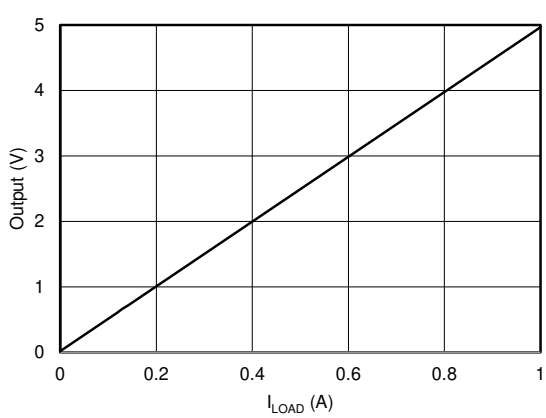

Figure 10-2. Low-Side, Current-Sense, Transfer Function

10.2.2 Typical Comparator Application

Comparators are used to differentiate between two different signal levels. For example, a comparator can be used to differentiate between an overvoltage situation and normal operation. The TLV9062-Q1 can be used as a comparator by applying the two voltages being compared to each input without any feedback from output to inverting input.

The TLV9062-Q1 features a rail-to-rail input and output stage with an input common-mode range that exceeds the supply rails by 100 mV. The TLV9062-Q1 is designed to prevent phase reversal over the entire input common-mode range. The propagation delay for the TLV9062-Q1 used as a comparator is equal to the overload recovery time plus the slew rate. Overdrive voltages less than 100 mV result in longer propagation delays because the overload recovery time increases and the slew rate decreases.

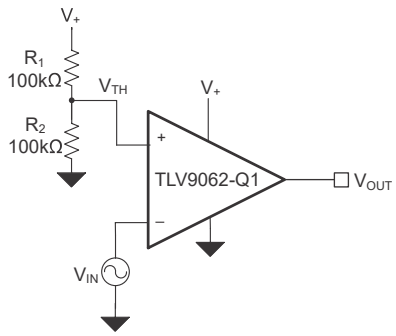

Figure 10-3. Typical Comparator Application

10.2.2.1 Design Requirements

The design requirements for this design are:

- Supply voltage (V_+): 5 V
- Input (V_{IN}): 0 V to 5 V
- Threshold voltage (V_{TH}): 2.5 V

10.2.2.2 Detailed Design Procedure

The inverting comparator circuit applies the input voltage (V_{IN}) to the inverting terminal of the op amp. Two resistors (R1 and R2) divide the supply voltage (V_{CC}) to create a midsupply threshold voltage (V_{TH}) as calculated in Equation 5. The circuit is shown in Figure 10-3. When V_{IN} is less then V_{TH}, the output voltage transitions to the positive supply and equals the high-level output voltage. When V_{IN} is greater than V_{TH}, the output voltage transitions to the negative supply and equals the low-level output voltage, V_{TH}.

$$V_{TH} = \frac{R_2}{R_1 + R_2} \times V_+ = 2.5\,V \tag{5}$$

10.2.2.3 Application Curves

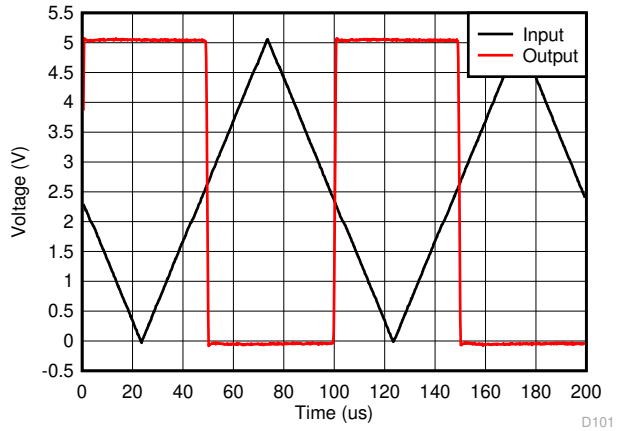

Figure 10-4. Comparator Response to Input Voltage (Propagation Delay Included)

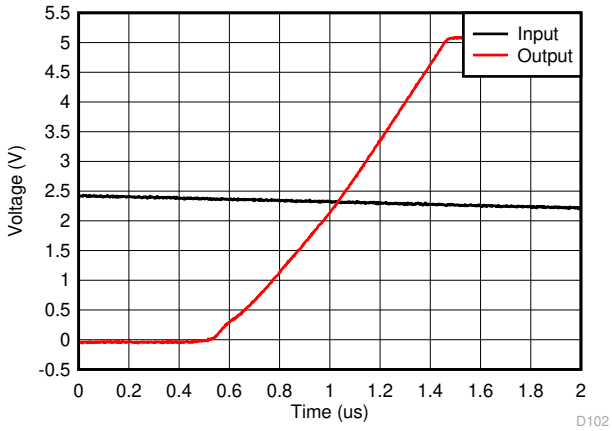

Figure 10-5. Rising Edge

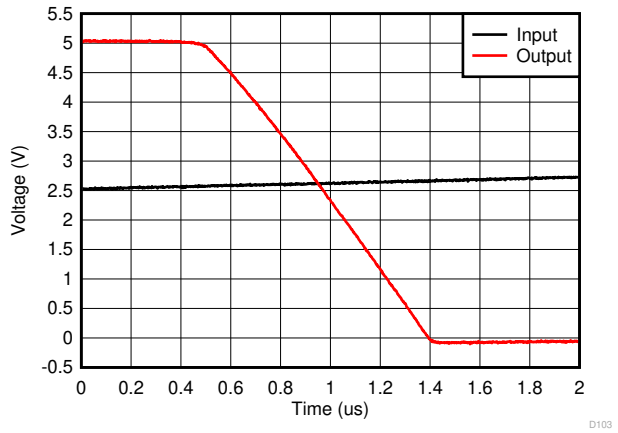

Figure 10-6. Falling Edge

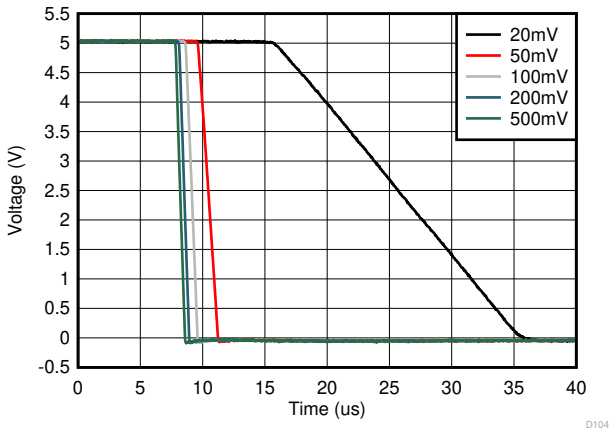

Figure 10-7. Falling Edge Propagation Delay vs Input Overdrive Voltage

10.3 Power Supply Recommendations

The TLV906x-Q1 series is specified for operation from 1.8 V to 5.5 V (±0.9 V to ±2.75 V); many specifications apply from –40°C to 125°C. The *Typical Characteristics* section presents parameters that can exhibit significant variance with regard to operating voltage or temperature.

CAUTION

Supply voltages larger than 6 V can permanently damage the device; see the *Absolute Maximum Ratings* table.

Place 0.1-µF bypass capacitors close to the power-supply pins to reduce errors coupling in from noisy or high-impedance power supplies. For more detailed information on bypass capacitor placement, see the *Layout* section.

10.3.1 Input and ESD Protection

The TLV906x-Q1 series incorporates internal ESD protection circuits on all pins. For input and output pins, this protection primarily consists of current-steering diodes connected between the input and power-supply pins. These ESD protection diodes provide in-circuit, input overdrive protection, as long as the current is limited to 10 mA, as shown in the *Absolute Maximum Ratings* table. Figure 10-8 shows how a series input resistor can be added to the driven input to limit the input current. The added resistor contributes thermal noise at the amplifier input and the value must be kept to a minimum in noise-sensitive applications.

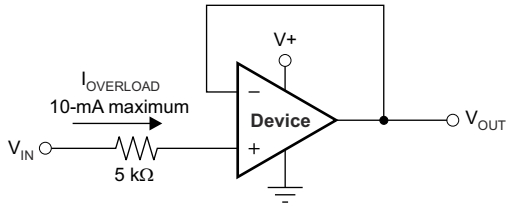

Figure 10-8. Input Current Protection

10.4 Layout

10.4.1 Layout Guidelines

For best operational performance of the device, use good printed circuit board (PCB) layout practices, including:

- Noise can propagate into analog circuitry through the power pins of the circuit as a whole and of the op amp itself. Bypass capacitors are used to reduce the coupled noise by providing low-impedance power sources local to the analog circuitry.
  - Connect low-ESR, 0.1-µF ceramic bypass capacitors between each supply pin and ground, placed as close to the device as possible. A single bypass capacitor from V+ to ground is adequate for single-supply applications.
- Separate grounding for analog and digital portions of circuitry is one of the simplest and most-effective methods of noise suppression. One or more layers on multilayer PCBs are usually devoted to ground planes. A ground plane helps distribute heat and reduces electromagnetic interference (EMI) noise pickup. Take care to physically separate digital and analog grounds, paying attention to the flow of the ground current.
- To reduce parasitic coupling, run the input traces as far away from the supply or output traces as possible. If these traces cannot be kept separate, crossing the sensitive trace at a 90 degree angle is much better as opposed to running the traces in parallel with the noisy trace.
- Place the external components as close to the device as possible. As shown in Figure 10-10, keeping R_F and R_G close to the inverting input minimizes parasitic capacitance on the inverting input.
- Keep the length of input traces as short as possible. Always remember that the input traces are the most sensitive part of the circuit.
- Consider a driven, low-impedance guard ring around the critical traces. A guard ring can significantly reduce leakage currents from nearby traces that are at different potentials.
- Cleaning the PCB following board assembly is recommended for best performance.
- Any precision integrated circuit can experience performance shifts resulting from moisture ingress into the plastic package. Following any aqueous PCB cleaning process, baking the PCB assembly is recommended to remove moisture introduced into the device packaging during the cleaning process. A low-temperature, post-cleaning bake at 85°C for 30 minutes is sufficient for most circumstances.

10.4.2 Layout Example

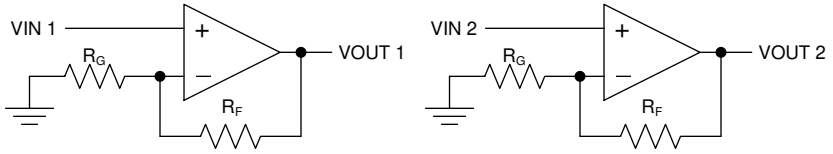

Figure 10-9. Schematic Representation

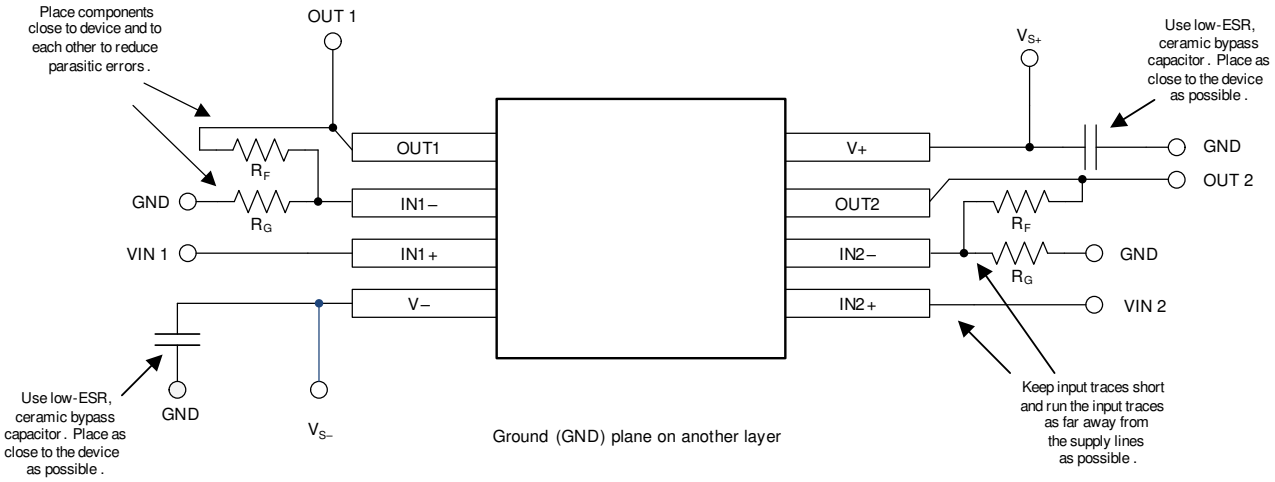

Figure 10-10. Layout Example

11 Device and Documentation Support

11.1 Documentation Support

11.1.1 Related Documentation

For related documentation, see the following:

- Texas Instruments, *TLVx313-Q1 Low-Power, Rail-to-Rail In/Out, 500-µV Typical Offset, 1-MHz Operational Amplifier for Cost-Sensitive Systems* data sheet.
- Texas Instruments, *TLVx314-Q1 3-MHz, Low-Power, Internal EMI Filter, RRIO, Operational Amplifier* data sheet.
- Texas Instruments, *EMI Rejection Ratio of Operational Amplifiers* application report.
- Texas Instruments, *QFN/SON PCB Attachment* application report.
- Texas Instruments, *Single-Ended Input to Differential Output Conversion Circuit Reference Design*.

11.2 Receiving Notification of Documentation Updates

To receive notification of documentation updates, navigate to the device product folder on ti.com. Click on *Subscribe to updates* to register and receive a weekly digest of any product information that has changed. For change details, review the revision history included in any revised document.

11.3 Support Resources

TI E2E™ support forums are an engineer's go-to source for fast, verified answers and design help — straight from the experts. Search existing answers or ask your own question to get the quick design help you need.

Linked content is provided "AS IS" by the respective contributors. They do not constitute TI specifications and do not necessarily reflect TI's views; see TI's Terms of Use.

11.4 Trademarks

TI E2E™ is a trademark of Texas Instruments.
All trademarks are the property of their respective owners.

11.5 Electrostatic Discharge Caution

This integrated circuit can be damaged by ESD. Texas Instruments recommends that all integrated circuits be handled with appropriate precautions. Failure to observe proper handling and installation procedures can cause damage.

ESD damage can range from subtle performance degradation to complete device failure. Precision integrated circuits may be more susceptible to damage because very small parametric changes could cause the device not to meet its published specifications.

11.6 Glossary

TI Glossary	This glossary lists and explains terms, acronyms, and definitions.

12 Mechanical, Packaging, and Orderable Information

The following pages include mechanical, packaging, and orderable information. This information is the most current data available for the designated devices. This data is subject to change without notice and revision of this document. For browser-based versions of this data sheet, refer to the left-hand navigation.

PACKAGING INFORMATION

Orderable Device	Status (1)	Package Type	Package Drawing	Pins	Package Qty	Eco Plan (2)	Lead finish/ Ball material (6)	MSL Peak Temp (3)	Op Temp (°C)	Device Marking (4/5)	Samples
PTLV9061QDBVRQ1	ACTIVE	SOT-23	DBV	5	3000	TBD	Call TI	Call TI	-40 to 125		Samples
TLV9061QDCKRQ1	ACTIVE	SC70	DCK	5	3000	RoHS & Green	NIPDAU	Level-1-260C-UNLIM	-40 to 125	1N5	Samples
TLV9061SQDBVRQ1	ACTIVE	SOT-23	DBV	6	3000	RoHS & Green	NIPDAU	Level-1-260C-UNLIM	-40 to 125	2CTF	Samples
TLV9062QDGKRQ1	ACTIVE	VSSOP	DGK	8	2500	RoHS & Green	NIPDAU	Level-1-260C-UNLIM	-40 to 125	27CT	Samples
TLV9062QDRQ1	ACTIVE	SOIC	D	8	2500	RoHS & Green	NIPDAU	Level-1-260C-UNLIM	-40 to 125	T9062Q	Samples
TLV9064QDRQ1	ACTIVE	SOIC	D	14	2500	RoHS & Green	NIPDAU	Level-2-260C-1 YEAR	-40 to 125	TLV9064QD	Samples
TLV9064QPWRQ1	ACTIVE	TSSOP	PW	14	2000	RoHS & Green	NIPDAU	Level-2-260C-1 YEAR	-40 to 125	T9064Q	Samples

(1) The marketing status values are defined as follows:
ACTIVE: Product device recommended for new designs.
LIFEBUY: TI has announced that the device will be discontinued, and a lifetime-buy period is in effect.
NRND: Not recommended for new designs. Device is in production to support existing customers, but TI does not recommend using this part in a new design.
PREVIEW: Device has been announced but is not in production. Samples may or may not be available.
OBSOLETE: TI has discontinued the production of the device.

(2) **RoHS:** TI defines "RoHS" to mean semiconductor products that are compliant with the current EU RoHS requirements for all 10 RoHS substances, including the requirement that RoHS substance do not exceed 0.1% by weight in homogeneous materials. Where designed to be soldered at high temperatures, "RoHS" products are suitable for use in specified lead-free processes. TI may reference these types of products as "Pb-Free".
RoHS Exempt: TI defines "RoHS Exempt" to mean products that contain lead but are compliant with EU RoHS pursuant to a specific EU RoHS exemption.
Green: TI defines "Green" to mean the content of Chlorine (Cl) and Bromine (Br) based flame retardants meet JS709B low halogen requirements of <=1000ppm threshold. Antimony trioxide based flame retardants must also meet the <=1000ppm threshold requirement.

(3) MSL, Peak Temp. - The Moisture Sensitivity Level rating according to the JEDEC industry standard classifications, and peak solder temperature.

(4) There may be additional marking, which relates to the logo, the lot trace code information, or the environmental category on the device.

(5) Multiple Device Markings will be inside parentheses. Only one Device Marking contained in parentheses and separated by a "~" will appear on a device. If a line is indented then it is a continuation of the previous line and the two combined represent the entire Device Marking for that device.

(6) Lead finish/Ball material - Orderable Devices may have multiple material finish options. Finish options are separated by a vertical ruled line. Lead finish/Ball material values may wrap to two lines if the finish value exceeds the maximum column width.

Important Information and Disclaimer: The information provided on this page represents TI's knowledge and belief as of the date that it is provided. TI bases its knowledge and belief on information provided by third parties, and makes no representation or warranty as to the accuracy of such information. Efforts are underway to better integrate information from third parties. TI has taken and continues to take reasonable steps to provide representative and accurate information but may not have conducted destructive testing or chemical analysis on incoming materials and chemicals. TI and TI suppliers consider certain information to be proprietary, and thus CAS numbers and other limited information may not be available for release.

In no event shall TI's liability arising out of such information exceed the total purchase price of the TI part(s) at issue in this document sold by TI to Customer on an annual basis.

OTHER QUALIFIED VERSIONS OF TLV9061-Q1, TLV9062-Q1, TLV9064-Q1 :

- Catalog : TLV9061, TLV9062, TLV9064

NOTE: Qualified Version Definitions:

- Catalog - TI's standard catalog product

7-May-2023

TAPE AND REEL INFORMATION

REEL DIMENSIONS

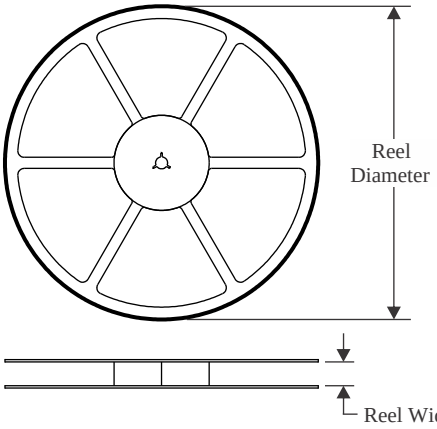

TAPE DIMENSIONS

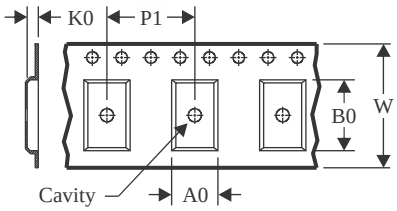

A0	Dimension designed to accommodate the component width
B0	Dimension designed to accommodate the component length
K0	Dimension designed to accommodate the component thickness
W	Overall width of the carrier tape
P1	Pitch between successive cavity centers

QUADRANT ASSIGNMENTS FOR PIN 1 ORIENTATION IN TAPE

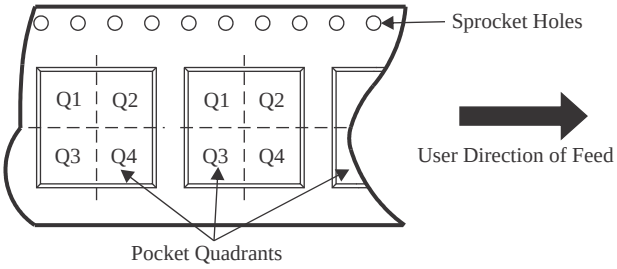

*All dimensions are nominal

Device	Package Type	Package Drawing	Pins	SPQ	Reel Diameter (mm)	Reel Width W1 (mm)	A0 (mm)	B0 (mm)	K0 (mm)	P1 (mm)	W (mm)	Pin1 Quadrant
TLV9061QDCKRQ1	SC70	DCK	5	3000	178.0	9.0	2.4	2.5	1.2	4.0	8.0	Q3
TLV9061SQDBVRQ1	SOT-23	DBV	6	3000	180.0	8.4	3.2	3.2	1.4	4.0	8.0	Q3
TLV9062QDGKRQ1	VSSOP	DGK	8	2500	330.0	12.4	5.3	3.4	1.4	8.0	12.0	Q1
TLV9062QDRQ1	SOIC	D	8	2500	330.0	12.4	6.4	5.2	2.1	8.0	12.0	Q1
TLV9064QDRQ1	SOIC	D	14	2500	330.0	16.4	6.5	9.0	2.1	8.0	16.0	Q1
TLV9064QPWRQ1	TSSOP	PW	14	2000	330.0	12.4	6.9	5.6	1.6	8.0	12.0	Q1

TAPE AND REEL BOX DIMENSIONS

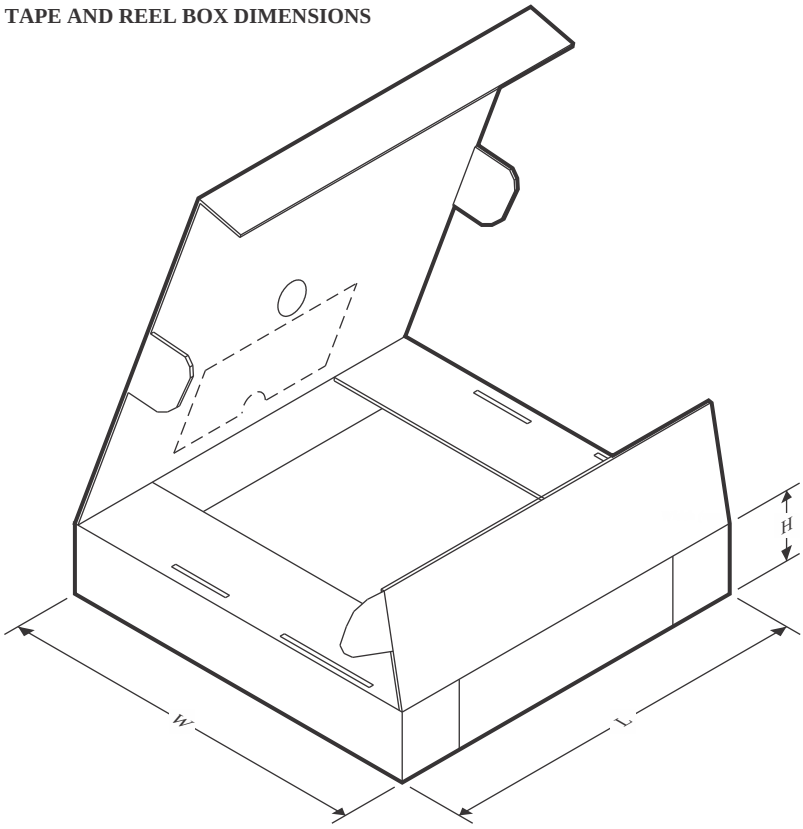

*All dimensions are nominal

Device	Package Type	Package Drawing	Pins	SPQ	Length (mm)	Width (mm)	Height (mm)
TLV9061QDCKRQ1	SC70	DCK	5	3000	190.0	190.0	30.0
TLV9061SQDBVRQ1	SOT-23	DBV	6	3000	210.0	185.0	35.0
TLV9062QDGKRQ1	VSSOP	DGK	8	2500	366.0	364.0	50.0
TLV9062QDRQ1	SOIC	D	8	2500	356.0	356.0	35.0
TLV9064QDRQ1	SOIC	D	14	2500	356.0	356.0	35.0
TLV9064QPWRQ1	TSSOP	PW	14	2000	356.0	356.0	35.0

PACKAGE OUTLINE

DBV0005A

SOT-23 - 1.45 mm max height

SMALL OUTLINE TRANSISTOR

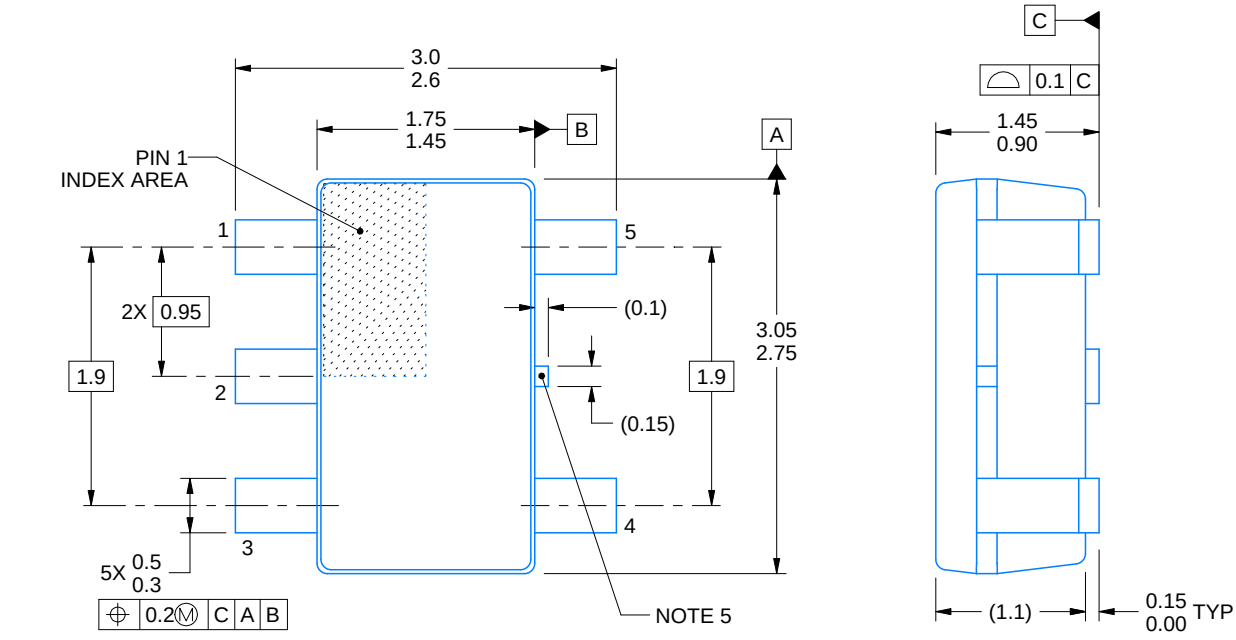

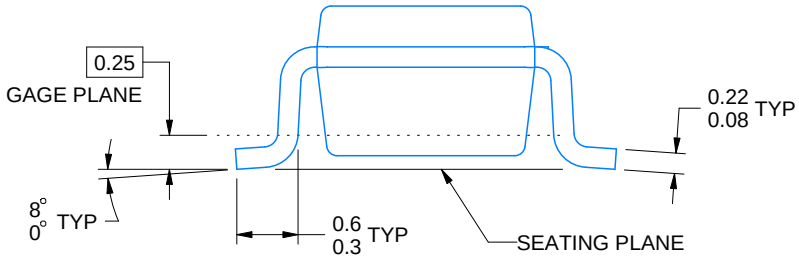

4214839/G 03/2023

NOTES:

1. All linear dimensions are in millimeters. Any dimensions in parenthesis are for reference only. Dimensioning and tolerancing per ASME Y14.5M.
2. This drawing is subject to change without notice.
3. Refernce JEDEC MO-178.
4. Body dimensions do not include mold flash, protrusions, or gate burrs. Mold flash, protrusions, or gate burrs shall not exceed 0.25 mm per side.
5. Support pin may differ or may not be present.

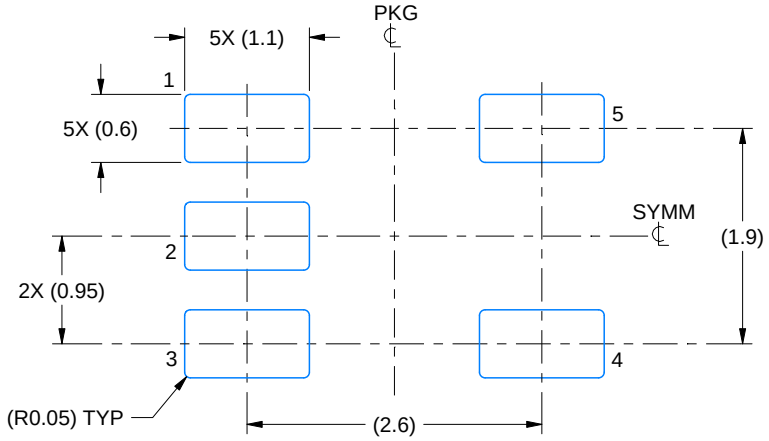

LAND PATTERN EXAMPLE
EXPOSED METAL SHOWN
SCALE:15X

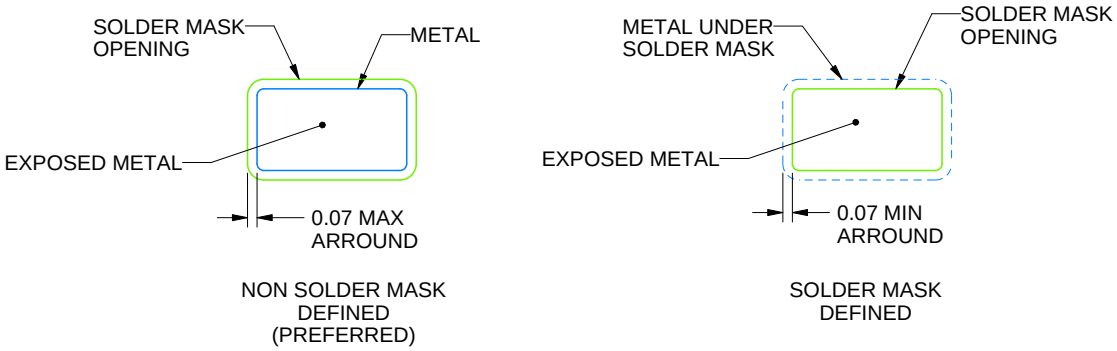

SOLDER MASK DETAILS

4214839/G 03/2023

NOTES: (continued)

6. Publication IPC-7351 may have alternate designs.
7. Solder mask tolerances between and around signal pads can vary based on board fabrication site.

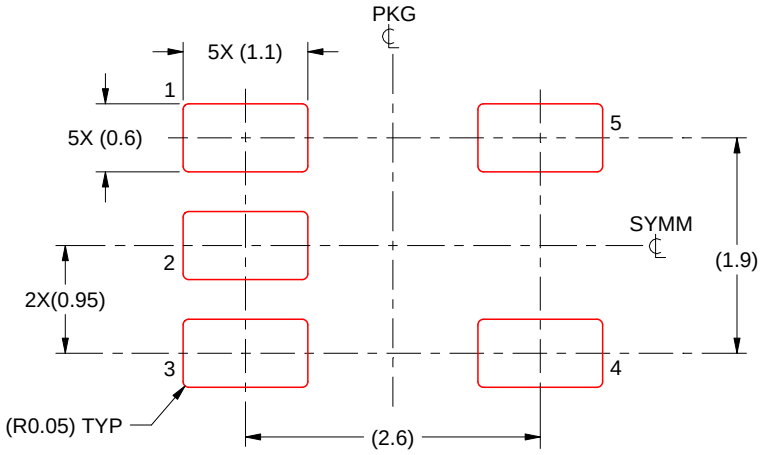

SOLDER PASTE EXAMPLE
BASED ON 0.125 mm THICK STENCIL
SCALE:15X

4214839/G 03/2023

NOTES: (continued)

8. Laser cutting apertures with trapezoidal walls and rounded corners may offer better paste release. IPC-7525 may have alternate design recommendations.
9. Board assembly site may have different recommendations for stencil design.

D (R–PDSO–G14) PLASTIC SMALL OUTLINE

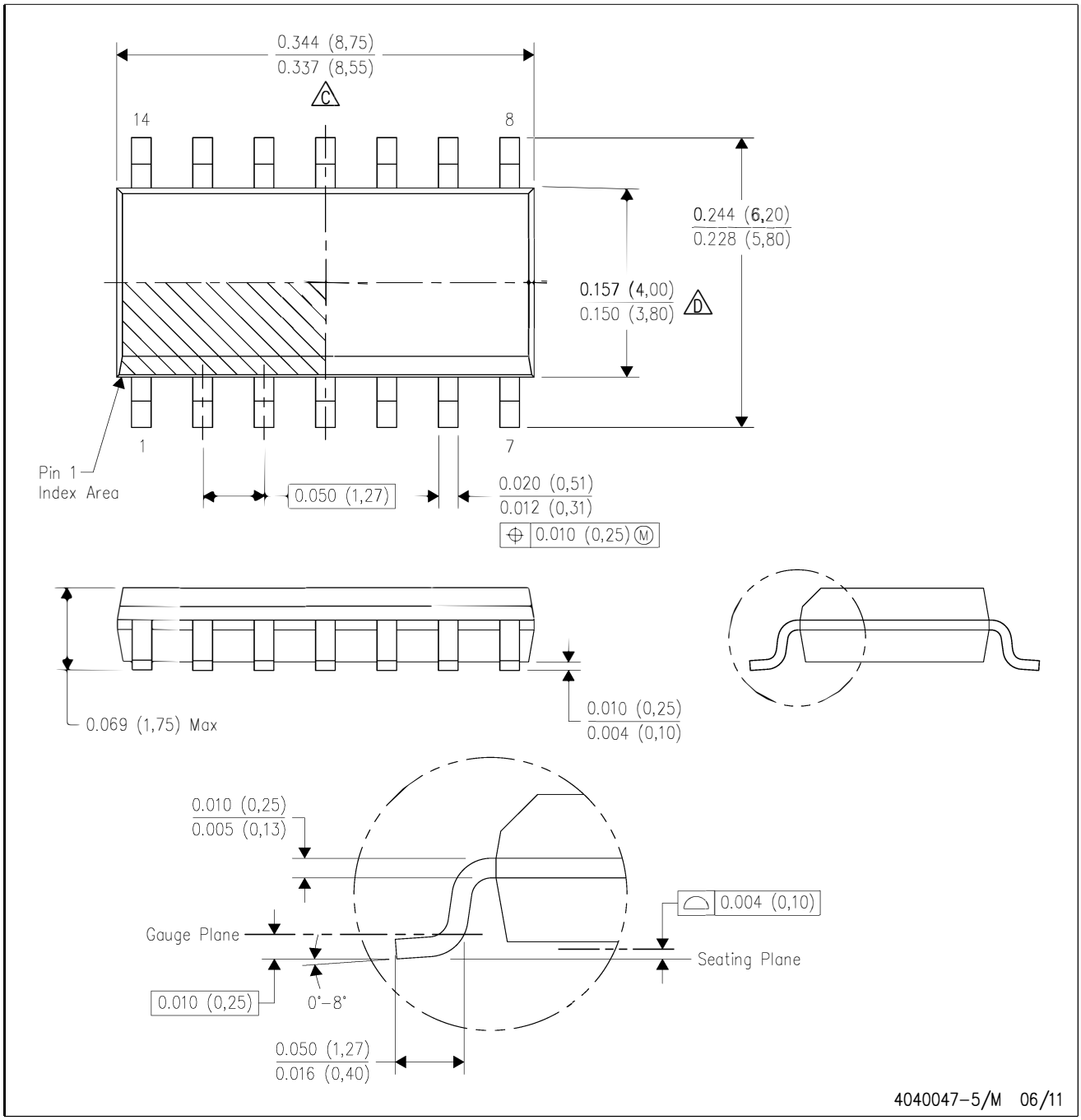

NOTES:
- A. All linear dimensions are in inches (millimeters).
- B. This drawing is subject to change without notice.
- C. Body length does not include mold flash, protrusions, or gate burrs. Mold flash, protrusions, or gate burrs shall not exceed 0.006 (0,15) each side.
- D. Body width does not include interlead flash. Interlead flash shall not exceed 0.017 (0,43) each side.
- E. Reference JEDEC MS–012 variation AB.

D (R–PDSO–G14) PLASTIC SMALL OUTLINE

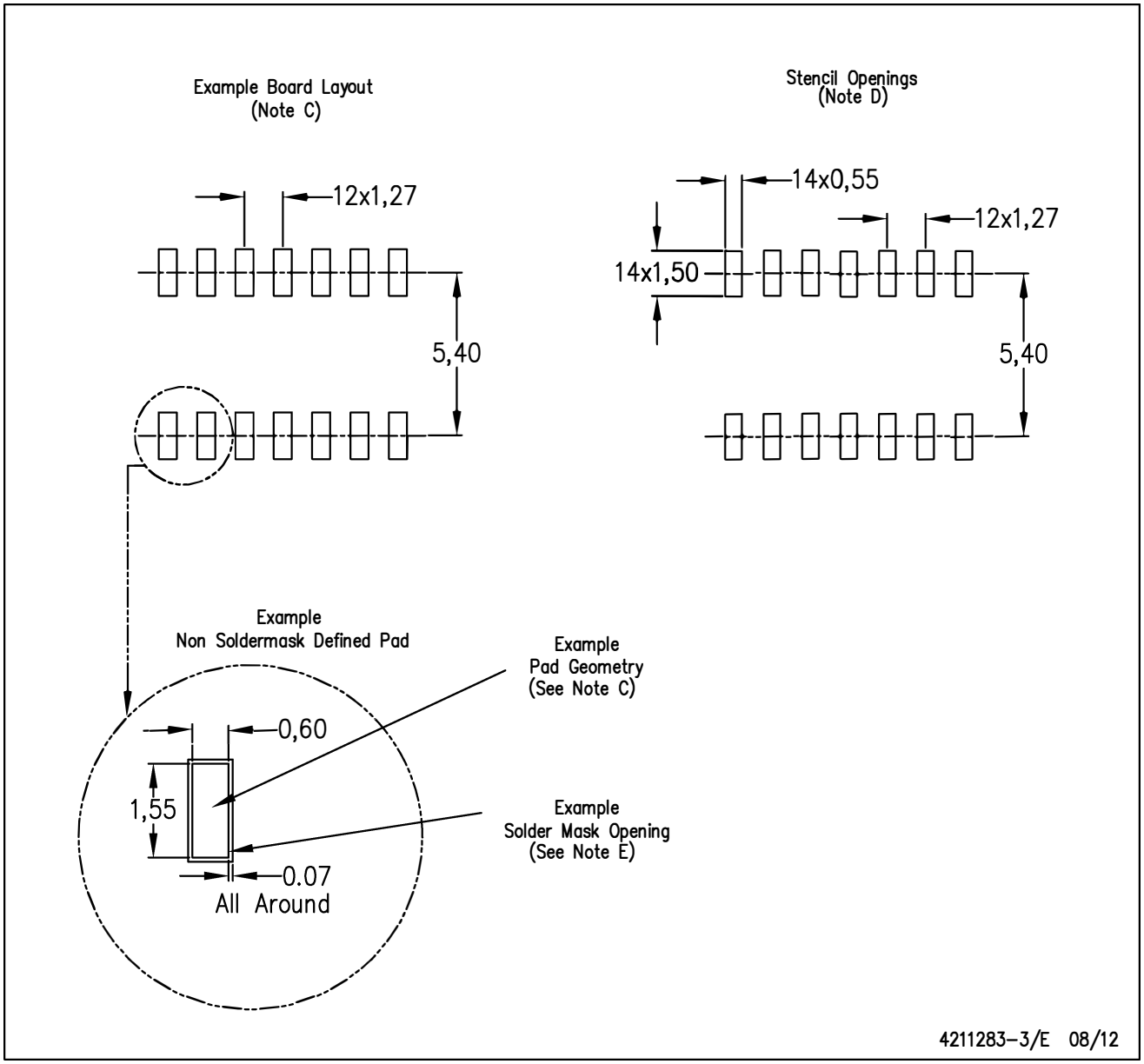

NOTES:
A. All linear dimensions are in millimeters.
B. This drawing is subject to change without notice.
C. Publication IPC–7351 is recommended for alternate designs.
D. Laser cutting apertures with trapezoidal walls and also rounding corners will offer better paste release. Customers should contact their board assembly site for stencil design recommendations. Refer to IPC–7525 for other stencil recommendations.
E. Customers should contact their board fabrication site for solder mask tolerances between and around signal pads.

PW (R–PDSO–G14) PLASTIC SMALL OUTLINE

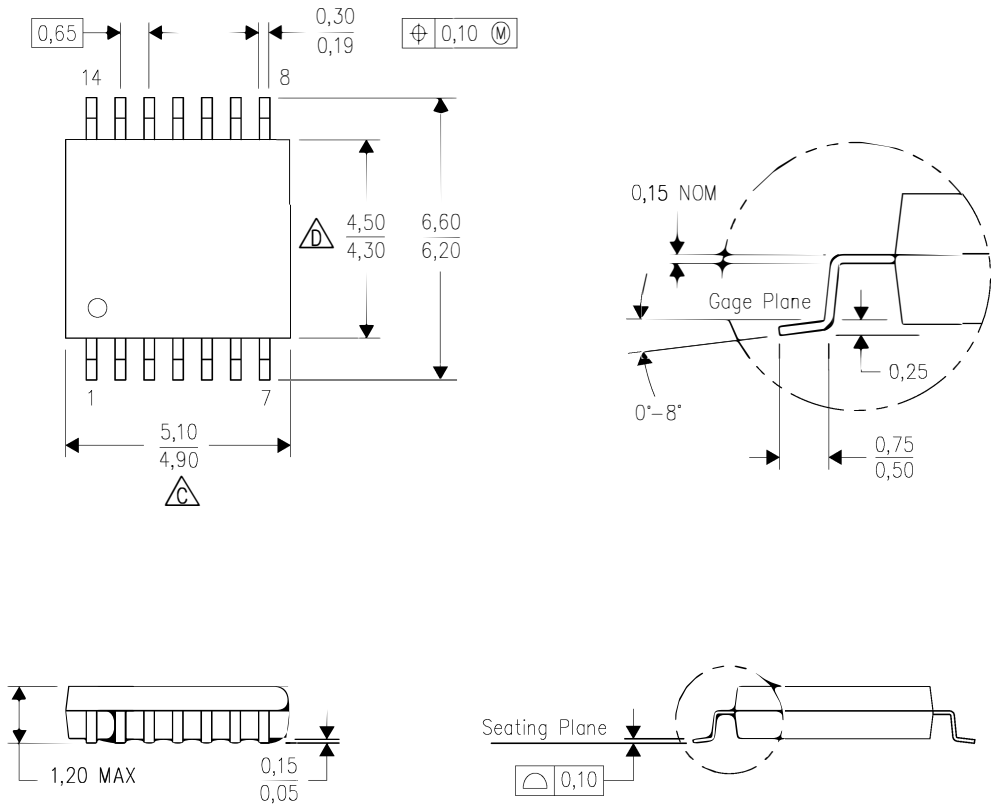

NOTES:
A. All linear dimensions are in millimeters. Dimensioning and tolerancing per ASME Y14.5M–1994.
B. This drawing is subject to change without notice.
C. Body length does not include mold flash, protrusions, or gate burrs. Mold flash, protrusions, or gate burrs shall not exceed 0,15 each side.
D. Body width does not include interlead flash. Interlead flash shall not exceed 0,25 each side.
E. Falls within JEDEC MO–153

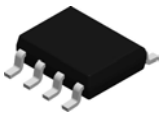

PACKAGE OUTLINE

D0008A

SOIC - 1.75 mm max height

SMALL OUTLINE INTEGRATED CIRCUIT

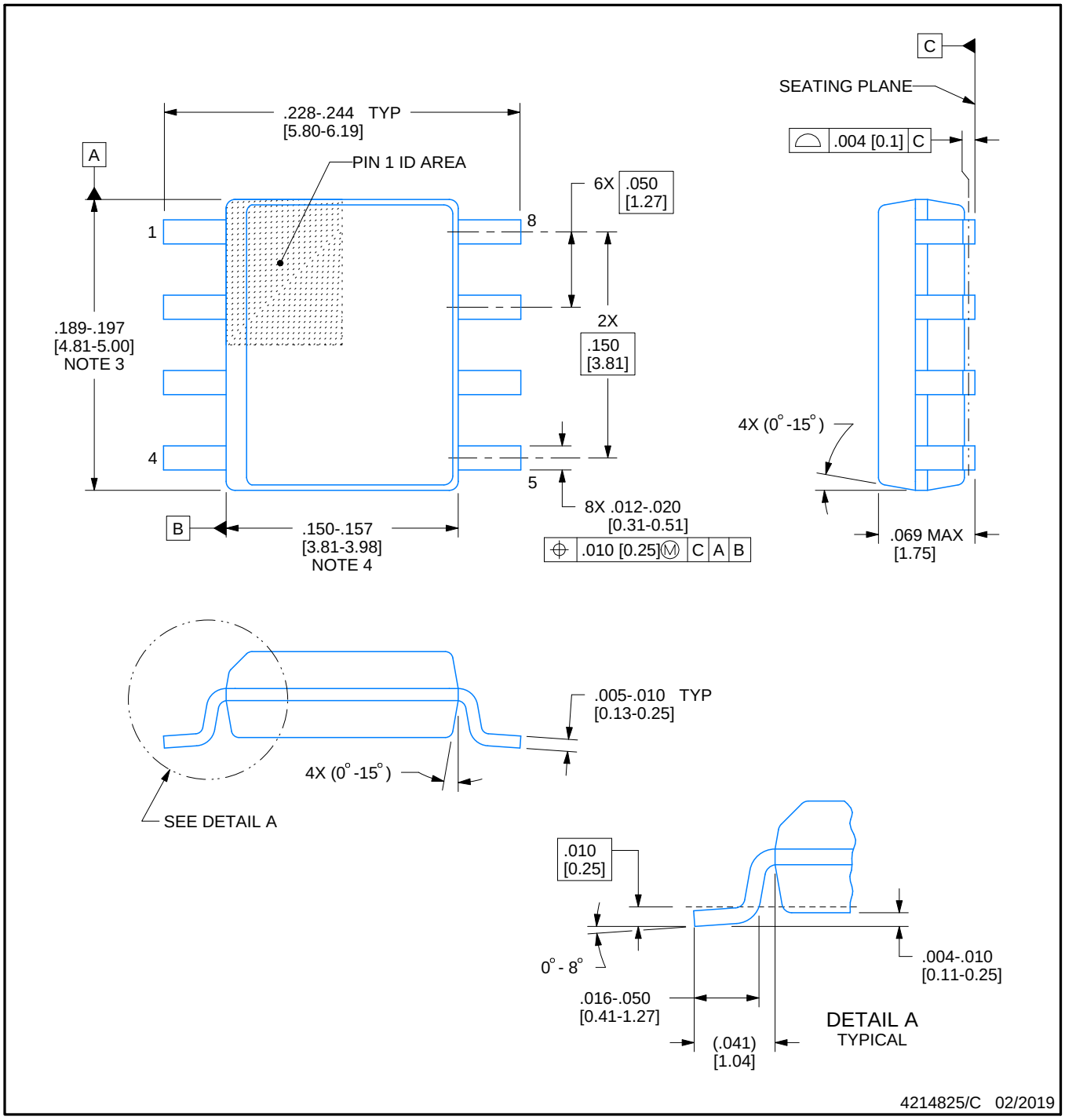

NOTES:

1. Linear dimensions are in inches [millimeters]. Dimensions in parenthesis are for reference only. Controlling dimensions are in inches. Dimensioning and tolerancing per ASME Y14.5M.
2. This drawing is subject to change without notice.
3. This dimension does not include mold flash, protrusions, or gate burrs. Mold flash, protrusions, or gate burrs shall not exceed .006 [0.15] per side.
4. This dimension does not include interlead flash.
5. Reference JEDEC registration MS-012, variation AA.

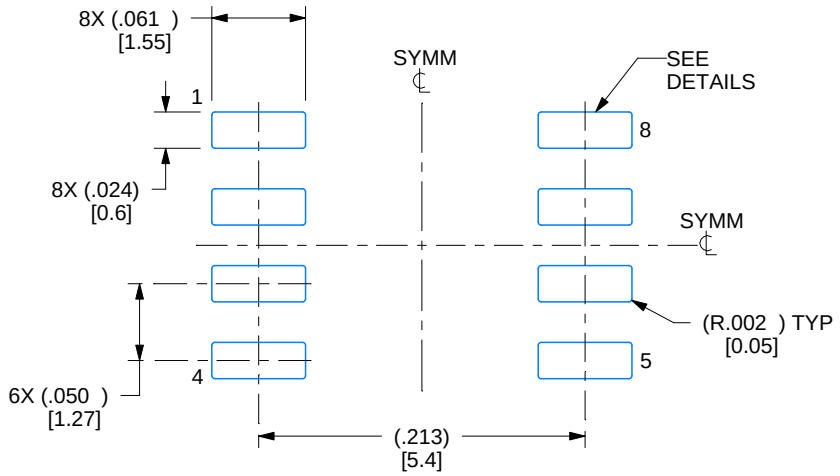

LAND PATTERN EXAMPLE
EXPOSED METAL SHOWN
SCALE:8X

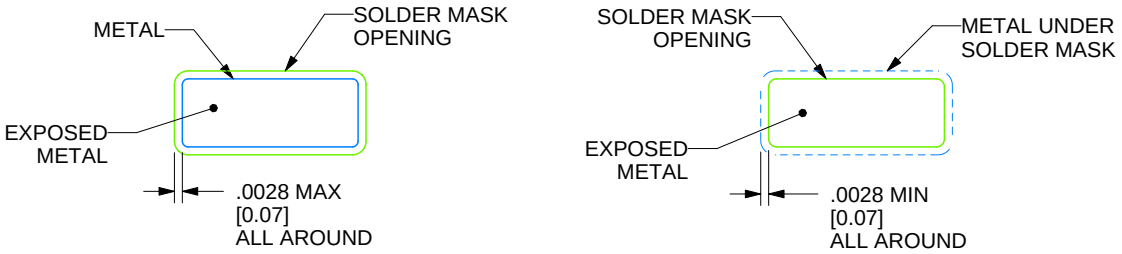

NON SOLDER MASK
DEFINED

SOLDER MASK
DEFINED

SOLDER MASK DETAILS

4214825/C 02/2019

NOTES: (continued)

6. Publication IPC-7351 may have alternate designs.
7. Solder mask tolerances between and around signal pads can vary based on board fabrication site.

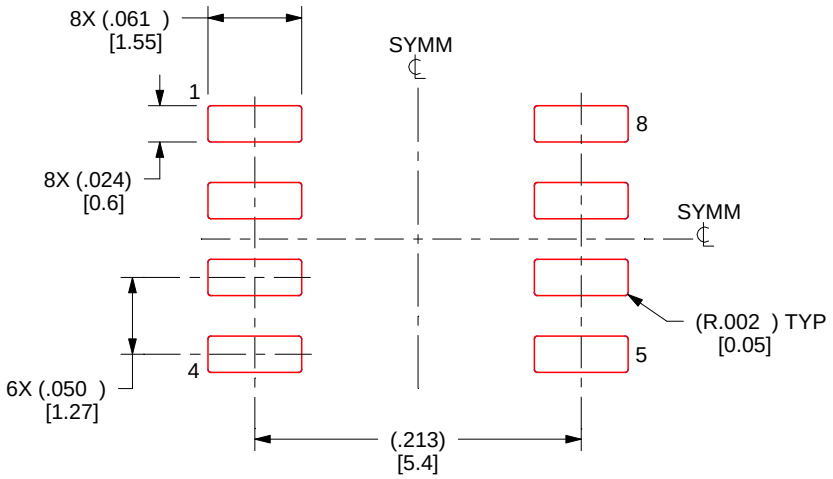

SOLDER PASTE EXAMPLE
BASED ON .005 INCH [0.125 MM] THICK STENCIL
SCALE:8X

4214825/C 02/2019

NOTES: (continued)

8. Laser cutting apertures with trapezoidal walls and rounded corners may offer better paste release. IPC-7525 may have alternate design recommendations.
9. Board assembly site may have different recommendations for stencil design.

PACKAGE OUTLINE

DBV0006A

SOT-23 - 1.45 mm max height

SMALL OUTLINE TRANSISTOR

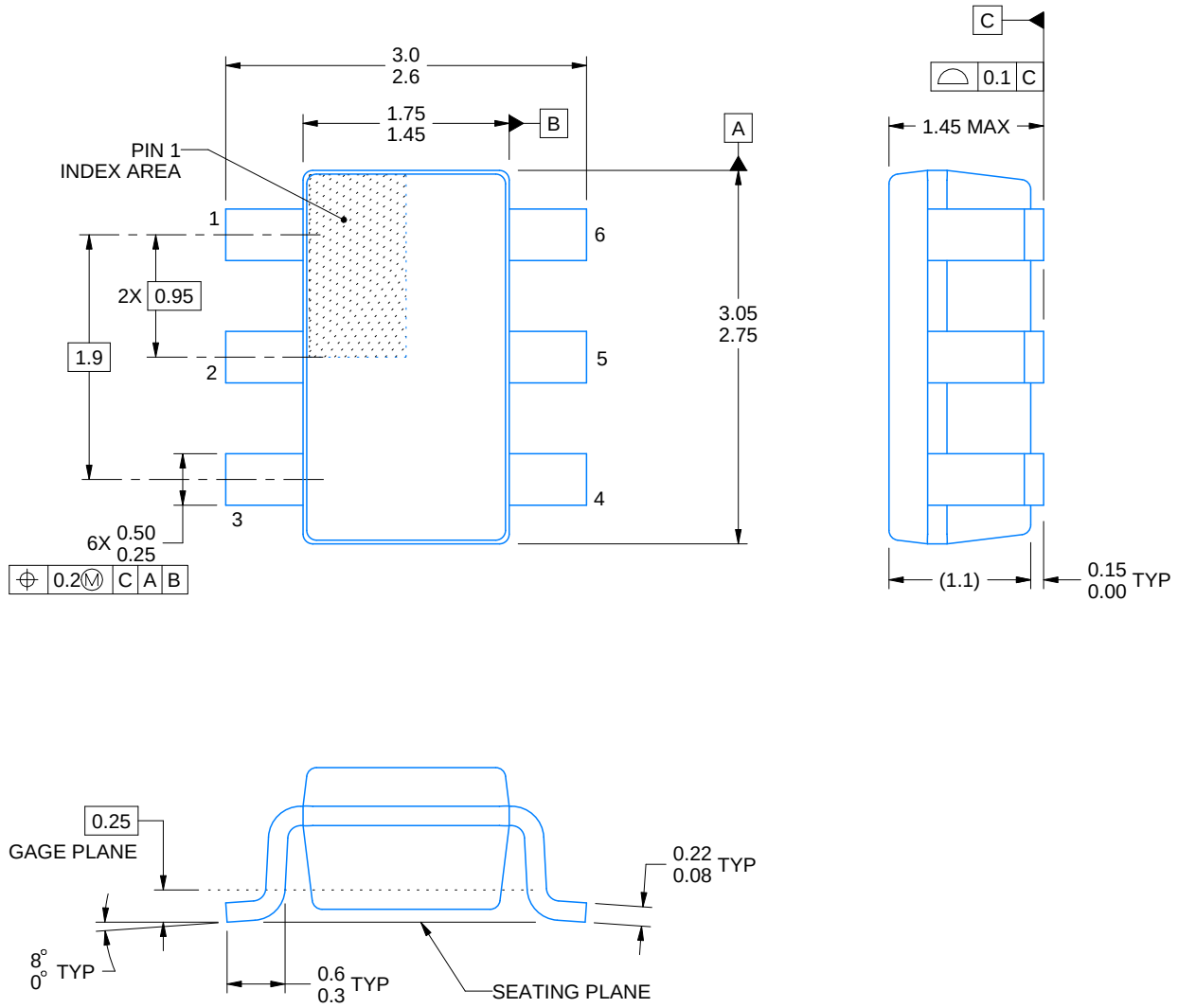

4214840/C 06/2021

NOTES:

1. All linear dimensions are in millimeters. Any dimensions in parenthesis are for reference only. Dimensioning and tolerancing per ASME Y14.5M.
2. This drawing is subject to change without notice.
3. Body dimensions do not include mold flash or protrusion. Mold flash and protrusion shall not exceed 0.25 per side.
4. Leads 1,2,3 may be wider than leads 4,5,6 for package orientation.
5. Refernce JEDEC MO-178.

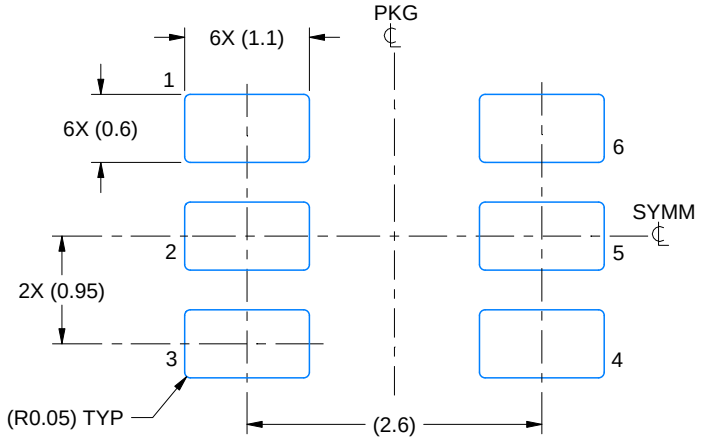

LAND PATTERN EXAMPLE
EXPOSED METAL SHOWN
SCALE:15X

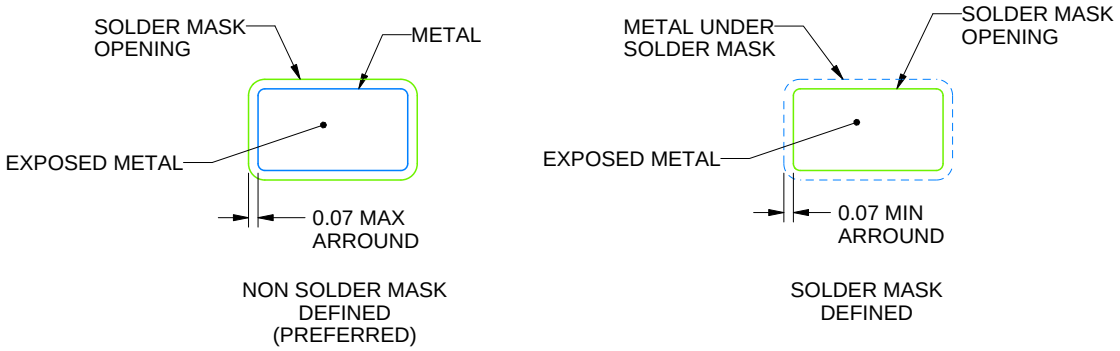

SOLDER MASK DETAILS

4214840/C 06/2021

NOTES: (continued)

6. Publication IPC-7351 may have alternate designs.
7. Solder mask tolerances between and around signal pads can vary based on board fabrication site.

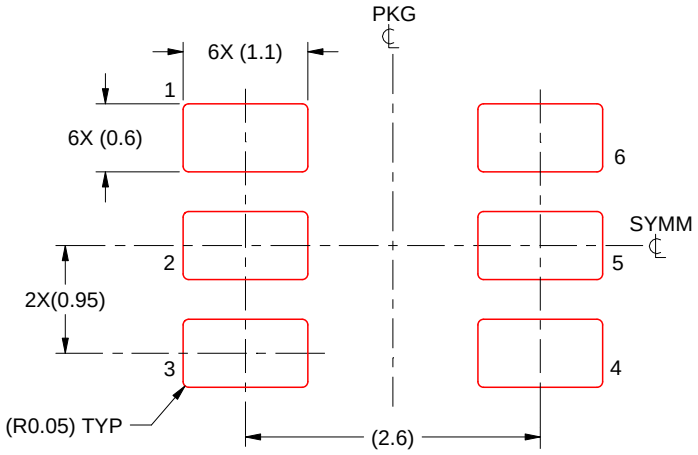

SOLDER PASTE EXAMPLE
BASED ON 0.125 mm THICK STENCIL
SCALE:15X

4214840/C 06/2021

NOTES: (continued)

8. Laser cutting apertures with trapezoidal walls and rounded corners may offer better paste release. IPC-7525 may have alternate design recommendations.
9. Board assembly site may have different recommendations for stencil design.

DGK (S–PDSO–G8) PLASTIC SMALL–OUTLINE PACKAGE

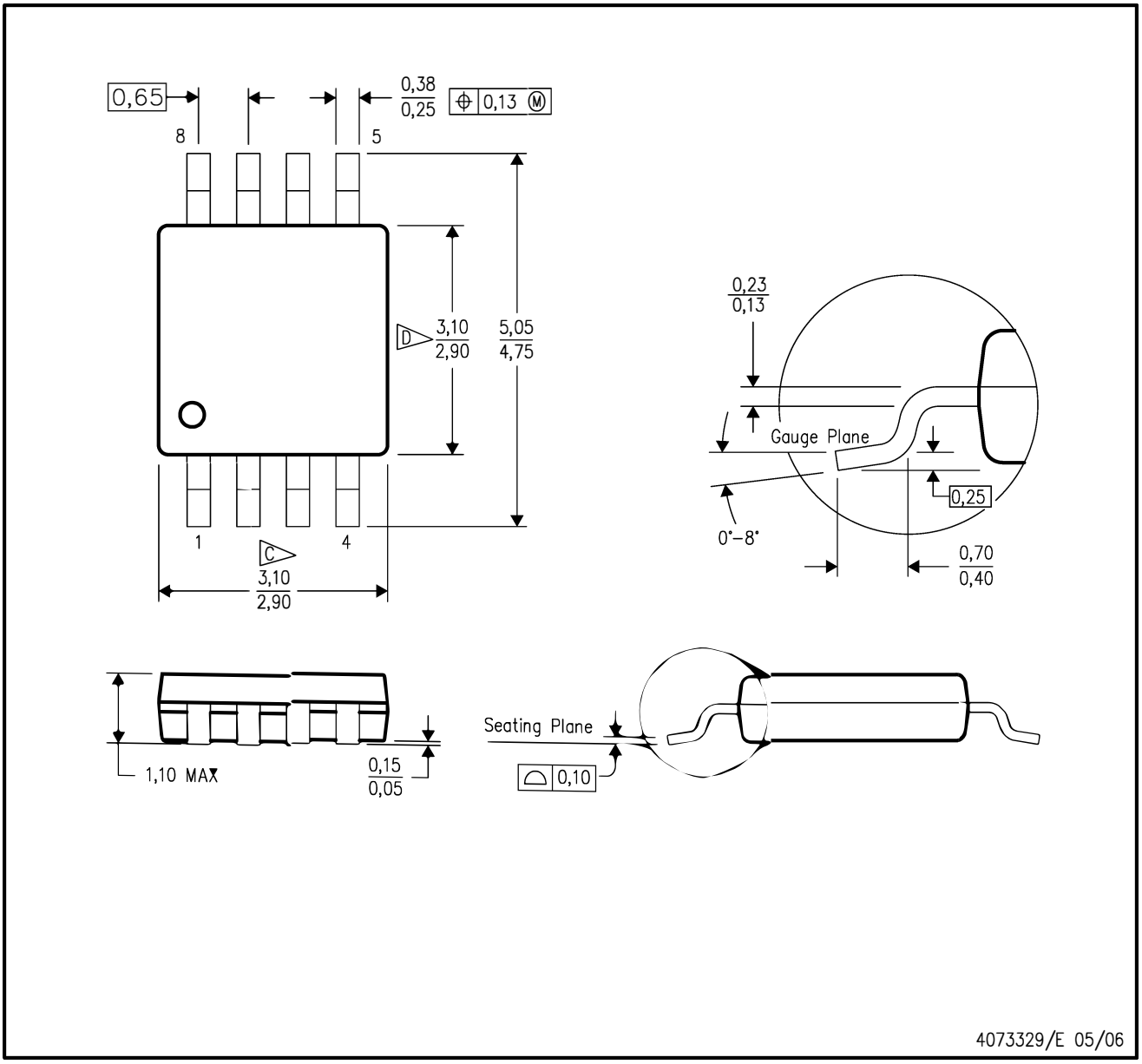

NOTES:
A. All linear dimensions are in millimeters.
B. This drawing is subject to change without notice.
C. Body length does not include mold flash, protrusions, or gate burrs. Mold flash, protrusions, or gate burrs shall not exceed 0.15 per end.
D. Body width does not include interlead flash. Interlead flash shall not exceed 0.50 per side.
E. Falls within JEDEC MO–187 variation AA, except interlead flash.

DGK (S–PDSO–G8) PLASTIC SMALL OUTLINE PACKAGE

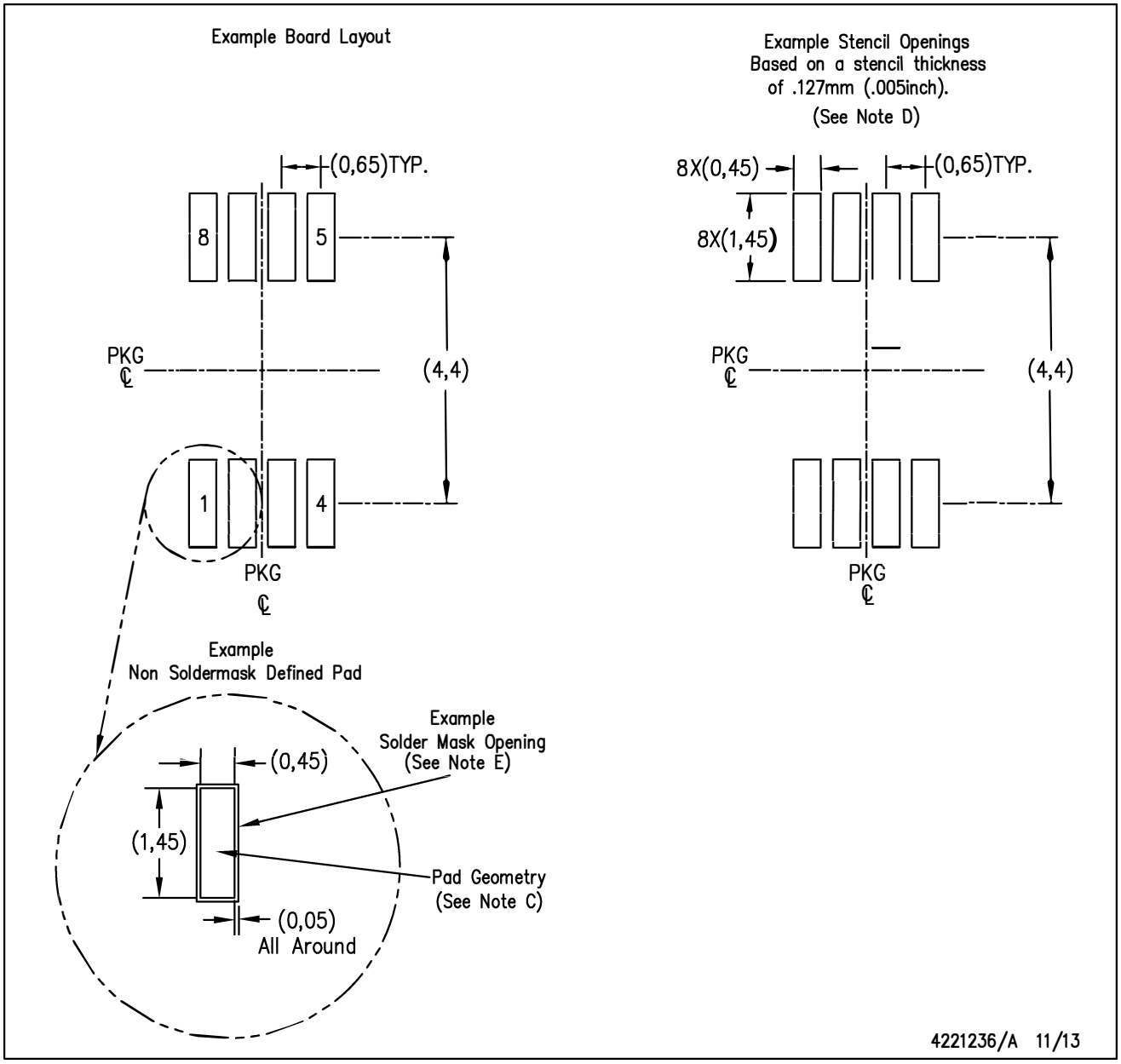

NOTES:
A. All linear dimensions are in millimeters.
B. This drawing is subject to change without notice.
C. Publication IPC–7351 is recommended for alternate designs.
D. Laser cutting apertures with trapezoidal walls and also rounding corners will offer better paste release. Customers should contact their board assembly site for stencil design recommendations. Refer to IPC–7525 for other stencil recommendations.
E. Customers should contact their board fabrication site for solder mask tolerances between and around signal pads.

DCK0005A

PACKAGE OUTLINE

SOT - 1.1 max height

SMALL OUTLINE TRANSISTOR

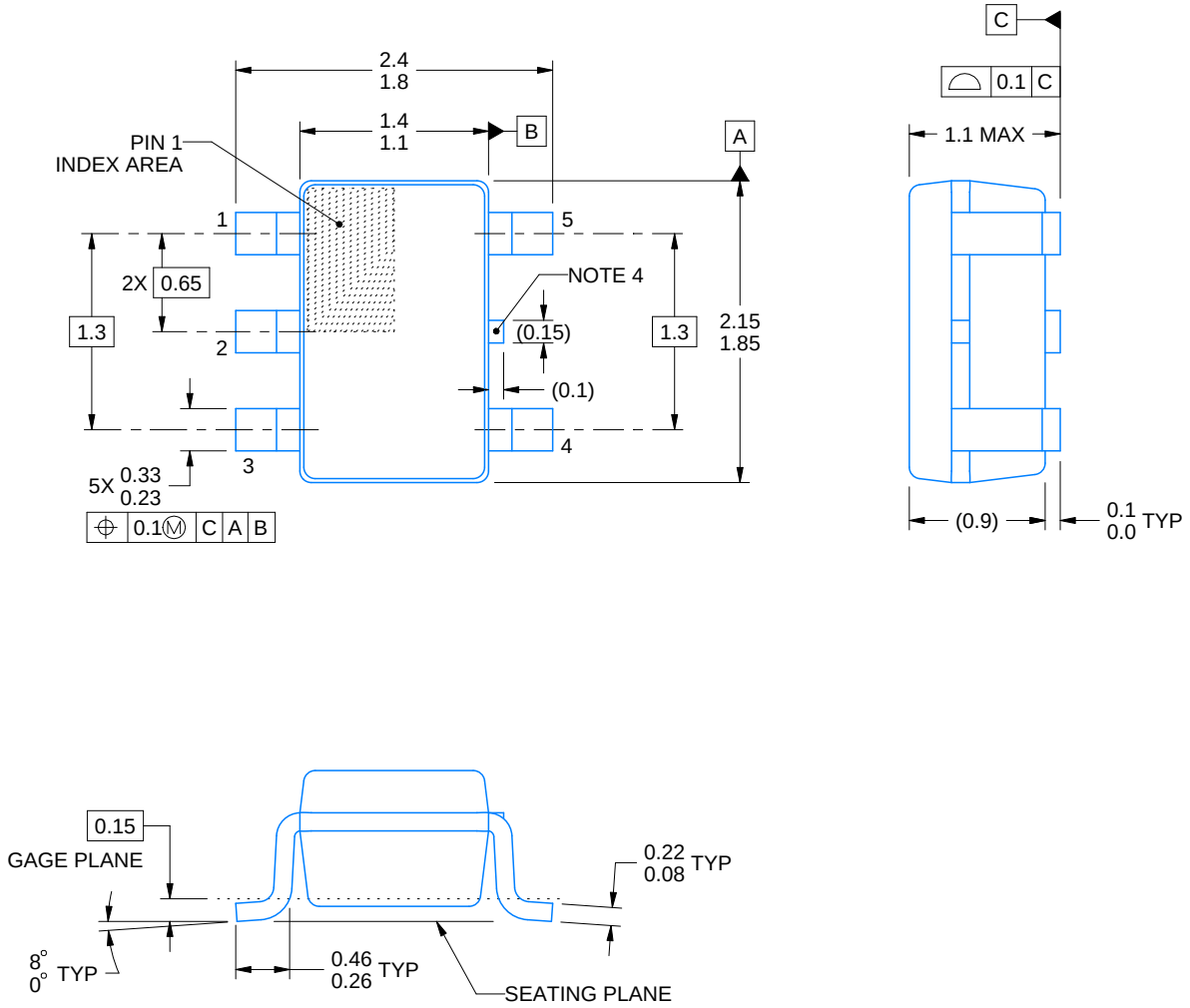

4214834/C 03/2023

NOTES:

1. All linear dimensions are in millimeters. Any dimensions in parenthesis are for reference only. Dimensioning and tolerancing per ASME Y14.5M.
2. This drawing is subject to change without notice.
3. Refernce JEDEC MO-203.
4. Support pin may differ or may not be present.

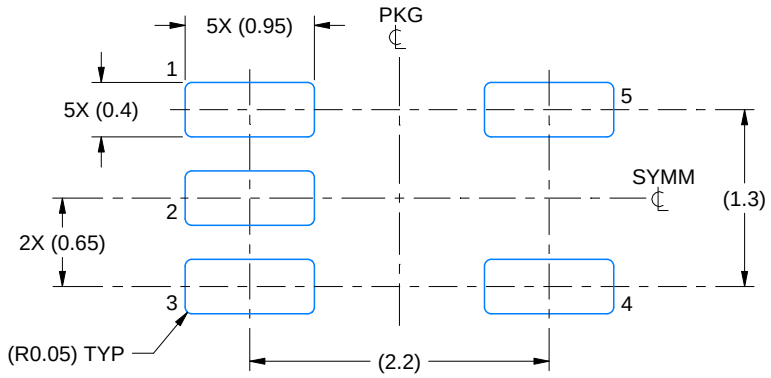

LAND PATTERN EXAMPLE
EXPOSED METAL SHOWN
SCALE:18X

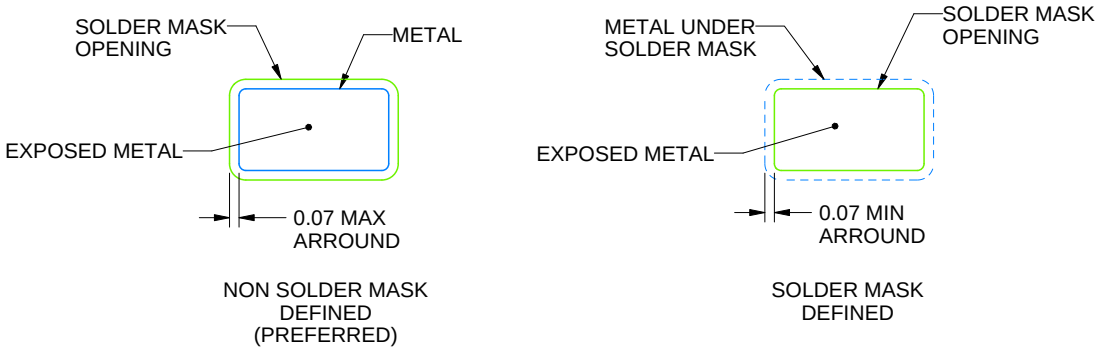

SOLDER MASK DETAILS

4214834/C 03/2023

NOTES: (continued)

4. Publication IPC-7351 may have alternate designs.
5. Solder mask tolerances between and around signal pads can vary based on board fabrication site.

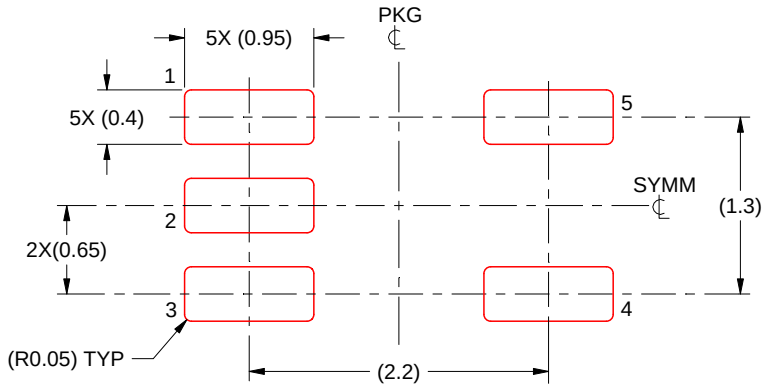

SOLDER PASTE EXAMPLE
BASED ON 0.125 THICK STENCIL
SCALE:18X

4214834/C 03/2023

NOTES: (continued)

6. Laser cutting apertures with trapezoidal walls and rounded corners may offer better paste release. IPC-7525 may have alternate design recommendations.
7. Board assembly site may have different recommendations for stencil design.

IMPORTANT NOTICE AND DISCLAIMER

TI PROVIDES TECHNICAL AND RELIABILITY DATA (INCLUDING DATA SHEETS), DESIGN RESOURCES (INCLUDING REFERENCE DESIGNS), APPLICATION OR OTHER DESIGN ADVICE, WEB TOOLS, SAFETY INFORMATION, AND OTHER RESOURCES “AS IS” AND WITH ALL FAULTS, AND DISCLAIMS ALL WARRANTIES, EXPRESS AND IMPLIED, INCLUDING WITHOUT LIMITATION ANY IMPLIED WARRANTIES OF MERCHANTABILITY, FITNESS FOR A PARTICULAR PURPOSE OR NON-INFRINGEMENT OF THIRD PARTY INTELLECTUAL PROPERTY RIGHTS.

These resources are intended for skilled developers designing with TI products. You are solely responsible for (1) selecting the appropriate TI products for your application, (2) designing, validating and testing your application, and (3) ensuring your application meets applicable standards, and any other safety, security, regulatory or other requirements.

These resources are subject to change without notice. TI grants you permission to use these resources only for development of an application that uses the TI products described in the resource. Other reproduction and display of these resources is prohibited. No license is granted to any other TI intellectual property right or to any third party intellectual property right. TI disclaims responsibility for, and you will fully indemnify TI and its representatives against, any claims, damages, costs, losses, and liabilities arising out of your use of these resources.

TI’s products are provided subject to TI’s Terms of Sale or other applicable terms available either on ti.com or provided in conjunction with such TI products. TI’s provision of these resources does not expand or otherwise alter TI’s applicable warranties or warranty disclaimers for TI products.

TI objects to and rejects any additional or different terms you may have proposed.

Mailing Address: Texas Instruments, Post Office Box 655303, Dallas, Texas 75265
Copyright © 2023, Texas Instruments Incorporated