# SGM8431-1Q
# Automotive, High Output Current, Rail-to-Rail I/O, Single CMOS Operational Amplifier

## GENERAL DESCRIPTION

The SGM8431-1Q is a single, rail-to-rail input and output, high voltage and high output drive CMOS operational amplifier for automotive applications. The device is optimized for high voltage operation from 4.5V to 36V single supply. It is capable of providing an output current of 400mA$_{P-P}$ (MIN).

The SGM8431-1Q is specifically designed for resolver excitation applications for motor driver in hybrid and electric vehicles, which require high voltage and high output current. In the application of resolver excitation, the SGM8431-1Q is used to replace the complicated driver of resolver excitation, which is built with operational amplifiers and power transistors.

The device is AEC-Q100 qualified (Automotive Electronics Council (AEC) standard Q100 Grade 1) and it is suitable for automotive applications.

The SGM8431-1Q is available in a Green TO-252-5 package. It is specified over the extended -40℃ to +125℃ temperature range.

## FEATURES

- **AEC-Q100 Qualified for Automotive Applications**
  **Device Temperature Grade 1**
  **$T_A$ = -40℃ to +125℃**
- **High Output Current: ±200mA (MIN)**
- **Rail-to-Rail Input and Output**
- **Supply Voltage Range: 4.5V to 36V**
- **Supply Current: 10mA (TYP)**
- **Input Bias Current: ±250pA (MAX) at +25℃**
- **Open-Loop Voltage Gain: 106dB (TYP)**
- **Unity-Gain Frequency: 4.5MHz (TYP)**
- **Slew Rate: 3.5V/μs (TYP)**
- **Thermal Shutdown**
- **Current-Limit Protection**
- **Available in a Green TO-252-5 Package**

## APPLICATIONS

Automotive Application
Driver of Resolver Excitation
Motor Driver
Speaker Driver
4mA-to-20mA Transmitter

代理商 威尔迈 www.viswie.com
联系电话 138 2526 5270

## TYPICAL APPLICATION

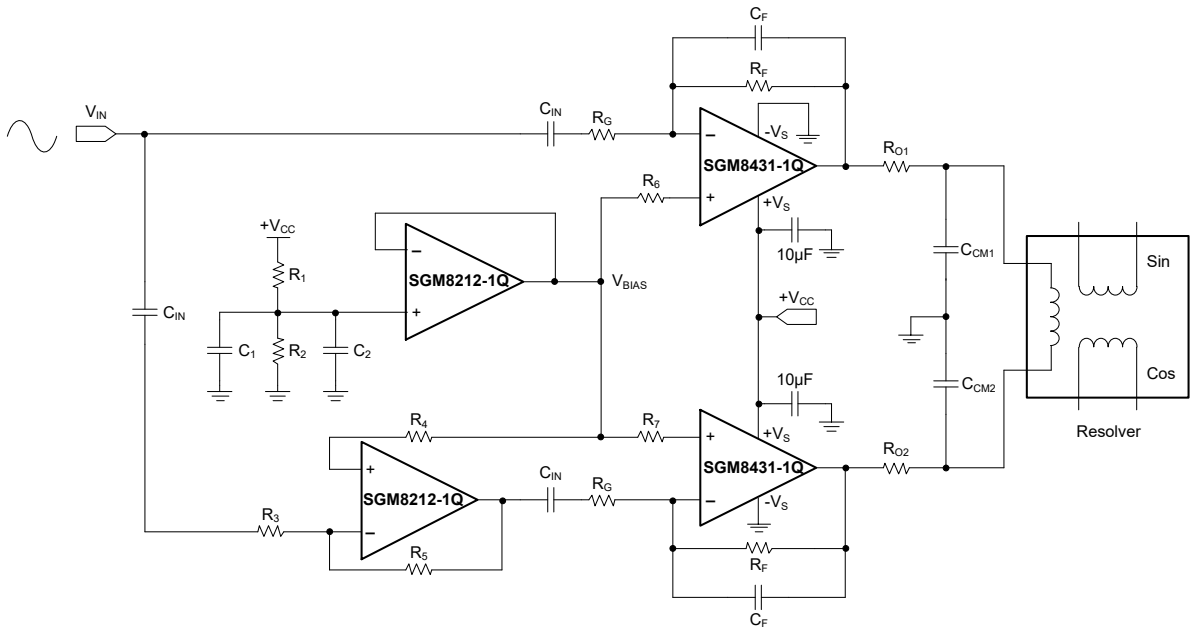


**Figure 1. Resolver Excitation Circuit**

# PACKAGE/ORDERING INFORMATION

| MODEL | PACKAGE DESCRIPTION | SPECIFIED TEMPERATURE RANGE | ORDERING NUMBER | PACKAGE MARKING | PACKING OPTION |
|---|---|---|---|---|---|
| SGM8431-1Q | TO-252-5 | -40℃ to +125℃ | SGM8431-1QOF5G/TR | 0RROF5<br>XXXXX | Tape and Reel, 2500 |

## MARKING INFORMATION

NOTE: XXXXX = Date Code, Trace Code and Vendor Code.

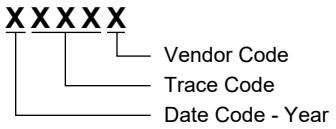


Green (RoHS & HSF): SG Micro Corp defines "Green" to mean Pb-Free (RoHS compatible) and free of halogen substances. If you have additional comments or questions, please contact your SGMICRO representative directly.

## ABSOLUTE MAXIMUM RATINGS

Supply Voltage, $+V_S$ to $-V_S$ ..... 40V
Differential Input Voltage [1], $V_{ID}$ ..... $\pm V_S$
Input Voltage Range, $V_{IN}$ ..... $(-V_S)$ - 0.3V to $(+V_S)$ + 0.3V
Input Current, $I_{IN}$ ..... ±10mA [2]
Output Terminal Input Voltage, $V_{OUT}$
..... $(-V_S)$ - 0.3V to $(+V_S)$ + 0.3V
Package Thermal Resistance
TO-252-5, $\theta_{JA}$ ..... 43.7℃/W
TO-252-5, $\theta_{JB}$ ..... 11.7℃/W
TO-252-5, $\theta_{JC}$ ..... 40℃/W
TO-252-5, $\theta_{JC\ (BOT)}$ ..... 6.3℃/W
Junction Temperature ..... +150℃
Storage Temperature Range ..... -65℃ to +150℃
Lead Temperature (Soldering, 10s) ..... +260℃
ESD Susceptibility
HBM ..... 5000V
CDM ..... 1000V

NOTES:
1. Differential voltages are at +IN, with respect to -IN.
2. A restriction resistor is used to limit the input current to less than 10mA if the input voltage is higher than the supply voltage.

## RECOMMENDED OPERATING CONDITIONS

Supply Voltage Range [1] ..... 4.5V to 36V
Operating Temperature Range ..... -40℃ to +125℃

NOTE:
1. If the output is shorted to ground or supply when supply voltage exceeds 30V, the SGM8431-1Q may be damaged. Do not operate the device continuously in a thermal shutdown state for a long time, as this operation may cause irreversible damage to the device.

## OVERSTRESS CAUTION

Stresses beyond those listed in Absolute Maximum Ratings may cause permanent damage to the device. Exposure to absolute maximum rating conditions for extended periods may affect reliability. Functional operation of the device at any conditions beyond those indicated in the Recommended Operating Conditions section is not implied.

## ESD SENSITIVITY CAUTION

This integrated circuit can be damaged if ESD protections are not considered carefully. SGMICRO recommends that all integrated circuits be handled with appropriate precautions. Failure to observe proper handling and installation procedures can cause damage. ESD damage can range from subtle performance degradation to complete device failure. Precision integrated circuits may be more susceptible to damage because even small parametric changes could cause the device not to meet the published specifications.

## DISCLAIMER

SG Micro Corp reserves the right to make any change in circuit design, or specifications without prior notice.

## PIN CONFIGURATION

**(TOP VIEW)**

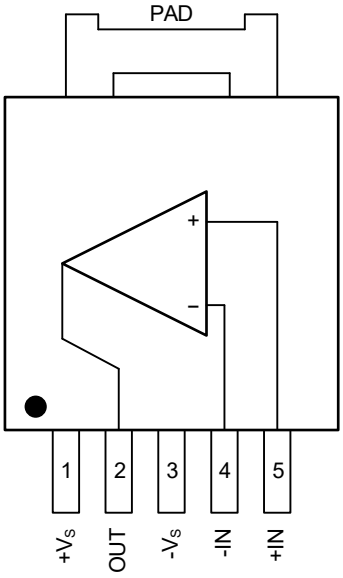


**TO-252-5**

NOTE: The PAD should be connected to $-V_S$, and the wiring must be as short as possible.

## ELECTRICAL CHARACTERISTICS

($V_S$ = 4.5V to 36V, $V_{CM}$ = $V_S$/2, $R_L$ = 10kΩ to $V_S$/2, Full = -40℃ to +125℃, typical values are at $T_A$ = +25℃, unless otherwise noted.)

| PARAMETER | SYMBOL | CONDITIONS | TEMP | MIN | TYP | MAX | UNITS |
|---|---|---|---|---|---|---|---|
| **Input Characteristics** | | | | | | | |
| Input Offset Voltage | $V_{OS}$ | | +25℃ | | ±1 | ±6 | mV |
| | | | Full | | | ±8 | |
| Input Offset Voltage Drift | $\Delta V_{OS}/\Delta T$ | | Full | | 4 | | μV/℃ |
| Input Bias Current | $I_B$ | | +25℃ | | ±10 | ±250 | pA |
| | | | Full | | | ±36 | nA |
| Input Offset Current | $I_{OS}$ | | +25℃ | | ±10 | ±250 | pA |
| | | | Full | | | ±25 | nA |
| Input Common Mode Voltage Range | $V_{CM}$ | CMRR ≥ 55dB | Full | 0 | | $V_S$ | V |
| Common Mode Rejection Ratio | CMRR | $V_S$ = 4.5V, $V_{CM}$ = 0V to 4.5V | +25℃ | 60 | 78 | | dB |
| | | | Full | 57 | | | |
| | | $V_S$ = 12V, $V_{CM}$ = 0V to 12V | +25℃ | 68 | 86 | | |
| | | | Full | 65 | | | |
| | | $V_S$ = 12V, $V_{CM}$ = 0V to 10V | +25℃ | 74 | 100 | | |
| | | | Full | 70 | | | |
| Open-Loop Voltage Gain | $A_V$ | $V_{OUT}$ = (-$V_S$) + 1V to (+$V_S$) - 1V | +25℃ | 98 | 106 | | dB |
| | | | Full | 92 | | | |
| **Output Characteristics** | | | | | | | |
| Output Voltage | $V_{OH}$ | $V_S$ = 36V | +25℃ | | 10 | 25 | mV |
| | | | Full | | | 30 | |
| | | $V_S$ = 36V, $I_{SOURCE}$ = 200mA | +25℃ | | 330 | 600 | |
| | | | Full | | | 800 | |
| | $V_{OL}$ | $V_S$ = 36V | +25℃ | | 10 | 25 | |
| | | | Full | | | 30 | |
| | | $V_S$ = 36V, $I_{SINK}$ = 200mA | +25℃ | | 290 | 600 | |
| | | | Full | | | 800 | |
| Output Source Current Limit | $I_{SOURCELIM}$ | | +25℃ | 230 | 350 | 450 | mA |
| | | | Full | 220 | | 480 | |
| Output Sink Current Limit | $I_{SINKLIM}$ | | +25℃ | 220 | 300 | 420 | mA |
| | | | Full | 200 | | 450 | |
| **Power Supply** | | | | | | | |
| Supply Current | $I_Q$ | G = +1, no signal, $R_L$ = open | +25℃ | | 10 | 16 | mA |
| | | | Full | | | 17 | |
| Power Supply Rejection Ratio | PSRR | $V_{CM}$ = 2.25V | +25℃ | 106 | 114 | | dB |
| | | | Full | 103 | | | |

## ELECTRICAL CHARACTERISTICS (continued)

($V_S$ = 12V, $V_{CM}$ = $V_S$/2, $R_L$ = 10kΩ to $V_S$/2, Full = -40℃ to +125℃, typical values are at $T_A$ = +25℃, unless otherwise noted.)

| PARAMETER | SYMBOL | CONDITIONS | TEMP | MIN | TYP | MAX | UNITS |
|---|---|---|---|---|---|---|---|
| **Dynamic Performance** | | | | | | | |
| Unity-Gain Frequency | $f_T$ | $C_L$ = 50pF | +25℃ | | 4.5 | | MHz |
| Phase Margin | $\varphi_O$ | $C_L$ = 50pF | +25℃ | | 75 | | ° |
| Slew Rate (1) | SR | G = +1, $C_L$ = 50pF, $V_{IN}$ = $4V_{P-P}$ | Full | 2 | 3.5 | | V/μs |
| Settling Time to 0.1% | $t_S$ | G = -1, $C_L$ = 50pF, $V_{IN}$ = $4V_{P-P}$ (4V to 8V) | +25℃ | | 4 | | μs |
| Overload Recovery Time | ORT | G = -10, $C_L$ = 50pF, $V_{IN} \times G_V > V_S$ | +25℃ | | 1 | | μs |
| **Noise Performance** | | | | | | | |
| Equivalent Input Noise Voltage | $e_n$ | f = 10kHz | +25℃ | | 30 | | nV/√Hz |
| Total Harmonic Distortion + Noise | THD+N | G = +2, $V_{OUT}$ = $2V_{P-P}$, f = 10kHz | +25℃ | | 0.03 | | % |
| **Thermal Protection** | | | | | | | |
| Thermal Shutdown Temperature | $T_{SHDN}$ | | | | 170 | | ℃ |
| Thermal Shutdown Hysteresis | $\Delta T_{SHDN}$ | | | | 20 | | ℃ |

NOTE: 1. Specified by design and characterization, not production tested.

## TYPICAL PERFORMANCE CHARACTERISTICS

At $T_A$ = +25℃, $V_S$ = 12V, $V_{CM}$ = $V_S$/2, $R_L$ = 10kΩ to $V_S$/2, unless otherwise noted.

Quiescent Current vs. Supply Voltage

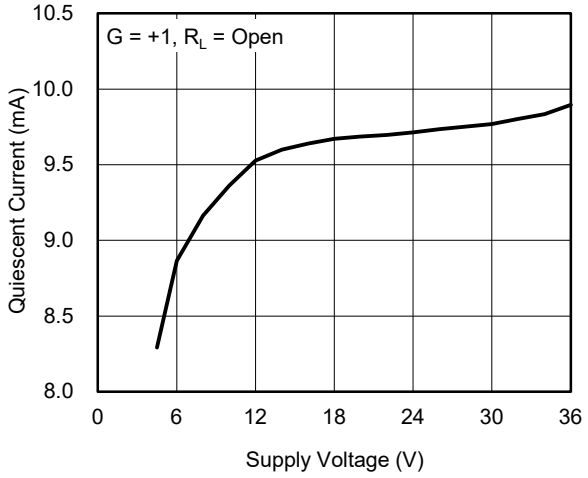


Input Offset Voltage vs. Supply Voltage

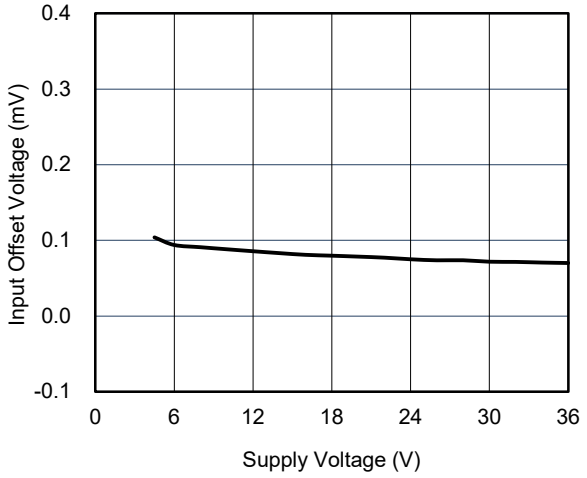


Input Offset Voltage vs. Input Common Mode Voltage

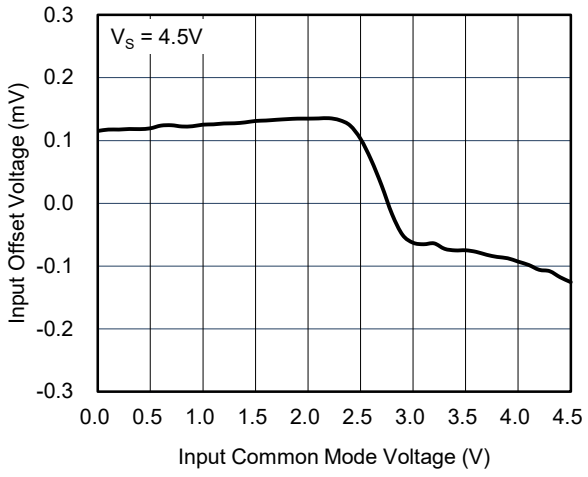


Input Offset Voltage vs. Input Common Mode Voltage

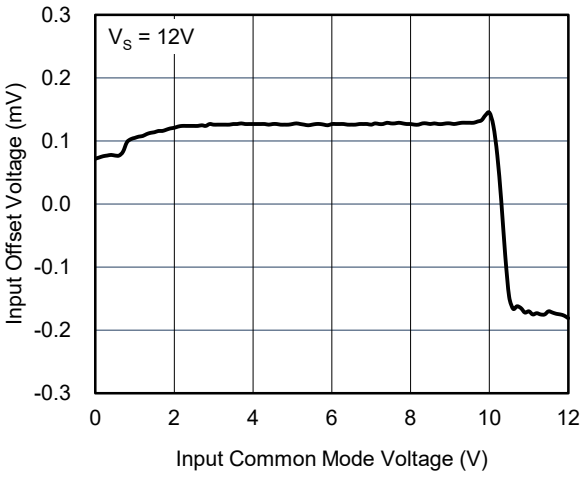


Maximum Output Voltage vs. Output Source Current

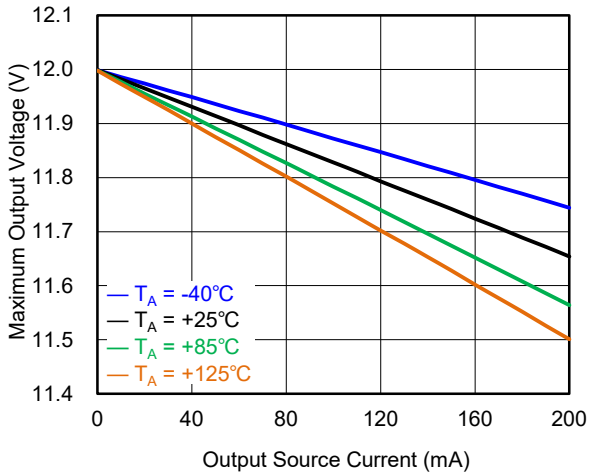


Maximum Output Voltage vs. Output Sink Current

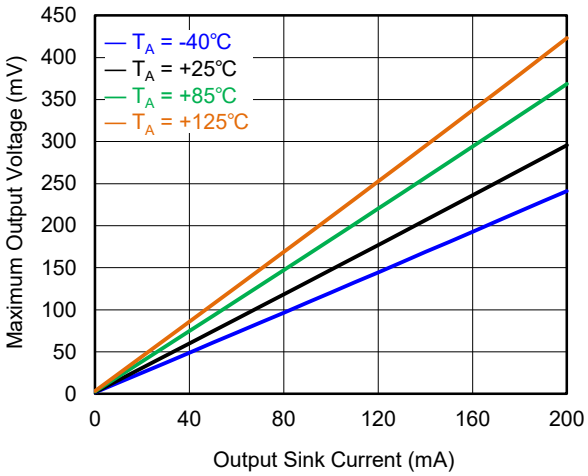

## TYPICAL PERFORMANCE CHARACTERISTICS (continued)

At $T_A$ = +25℃, $V_S$ = 12V, $V_{CM}$ = $V_S$/2, $R_L$ = 10kΩ to $V_S$/2, unless otherwise noted.

Quiescent Current vs. Temperature

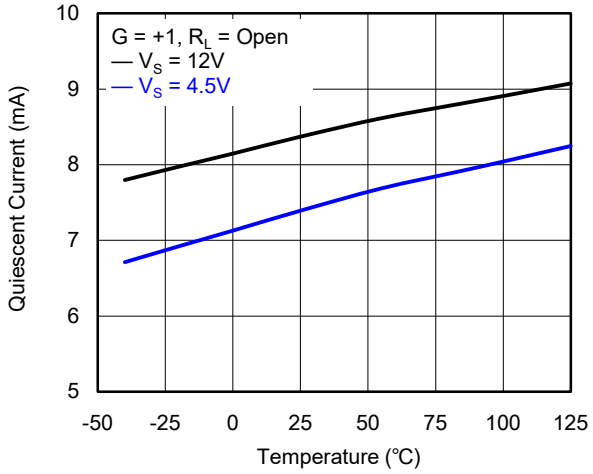


Input Offset Voltage vs. Temperature

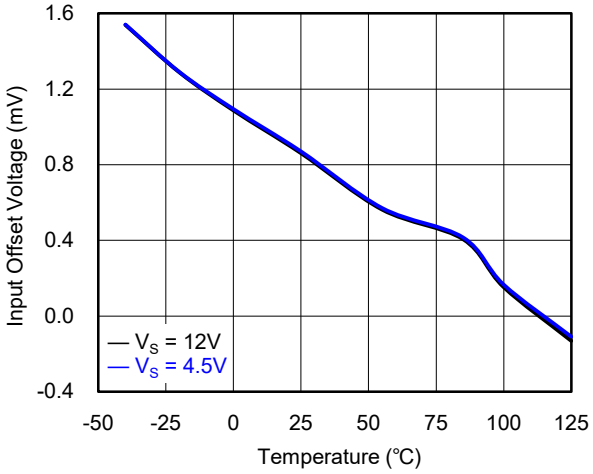


Input Bias Current vs. Temperature

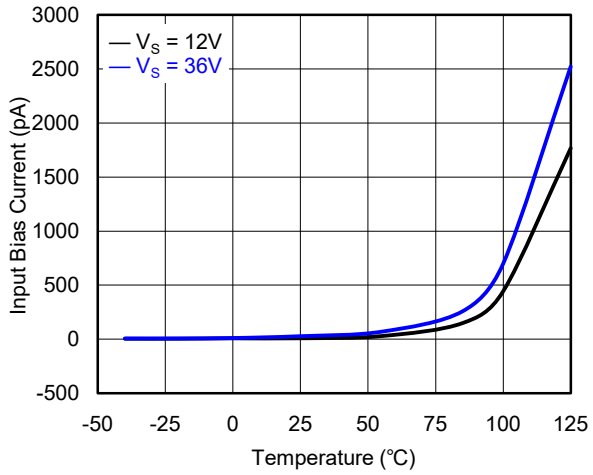


Input Offset Current vs. Temperature

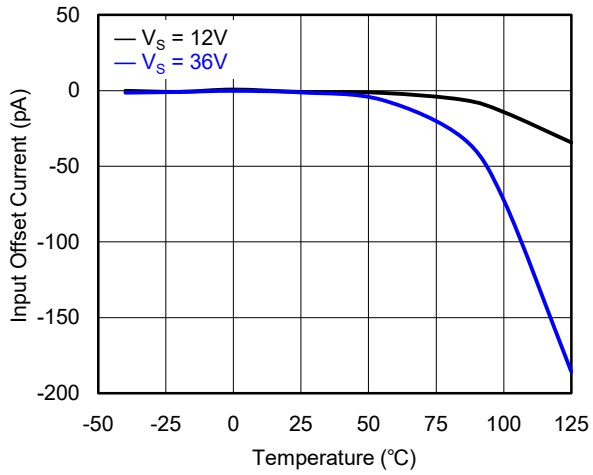


Output Source Current Limit vs. Temperature

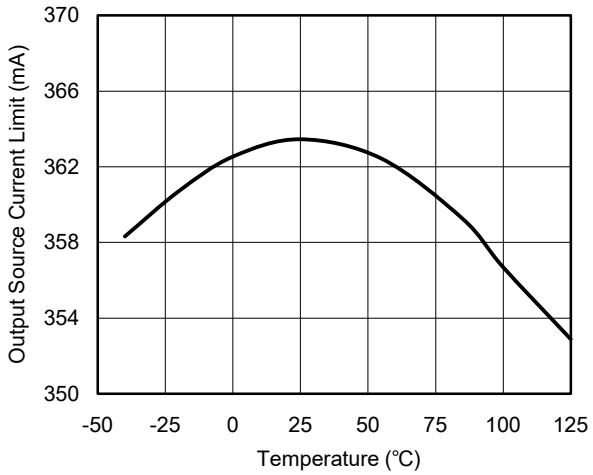


Output Sink Current Limit vs. Temperature

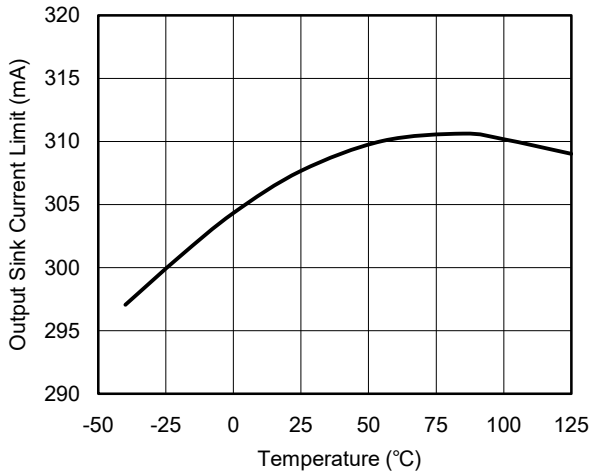

## TYPICAL PERFORMANCE CHARACTERISTICS (continued)

At $T_A$ = +25℃, $V_S$ = 12V, $V_{CM}$ = $V_S$/2, $R_L$ = 10kΩ to $V_S$/2, unless otherwise noted.

Open-Loop Voltage Gain vs. Temperature

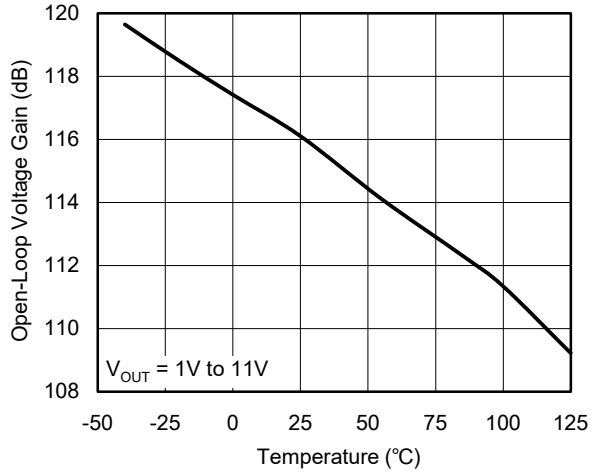


PSRR vs. Temperature

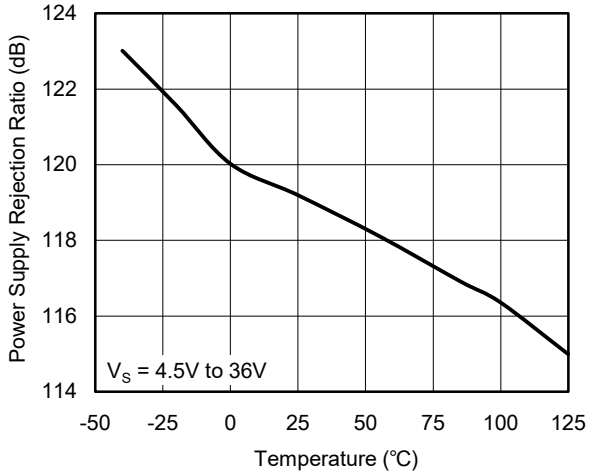


CMRR vs. Temperature

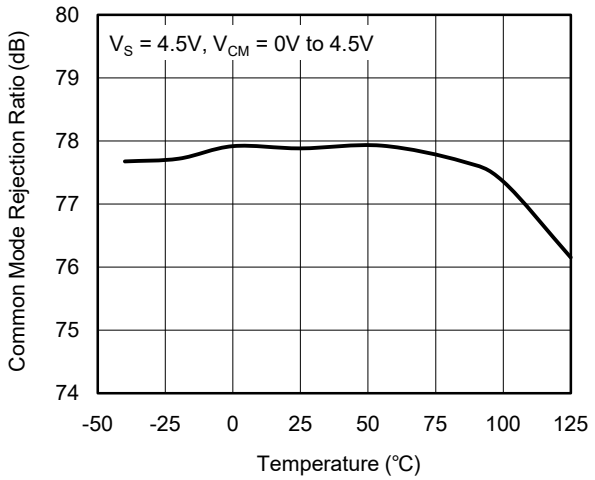


CMRR vs. Temperature

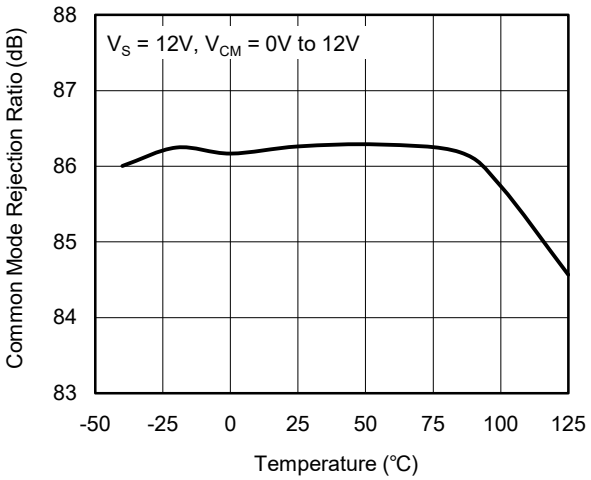


CMRR vs. Temperature

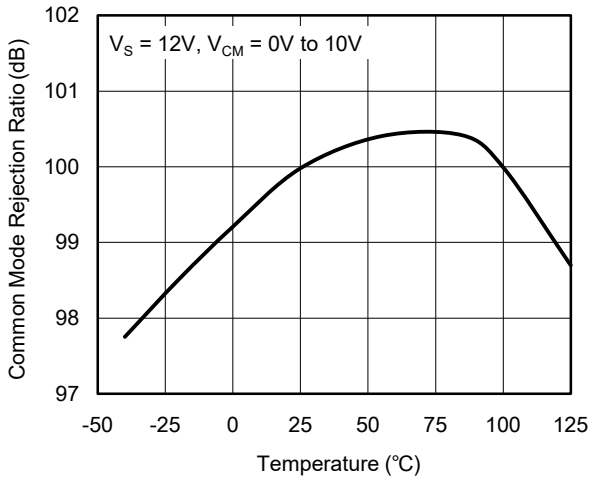


Maximum Output Voltage vs. Frequency

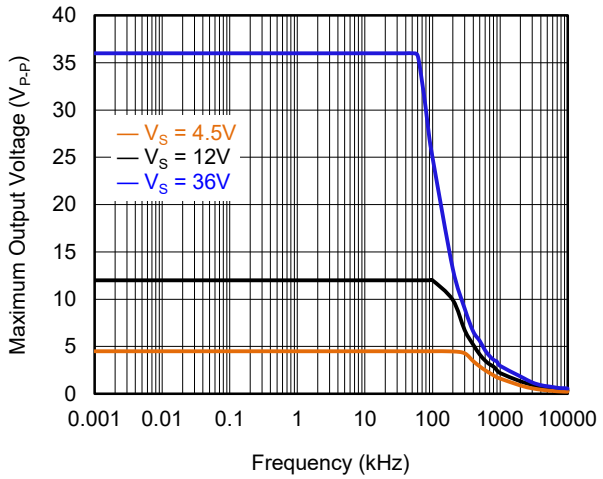

## TYPICAL PERFORMANCE CHARACTERISTICS (continued)

At $T_A$ = +25℃, $V_S$ = 12V, $V_{CM}$ = $V_S$/2, $R_L$ = 10kΩ to $V_S$/2, unless otherwise noted.

PSRR vs. Frequency

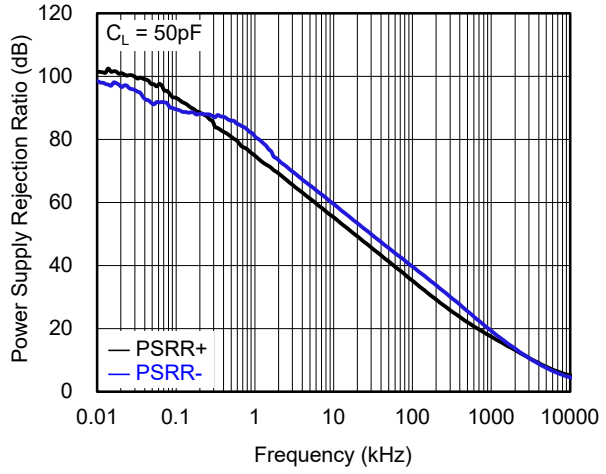


CMRR vs. Frequency

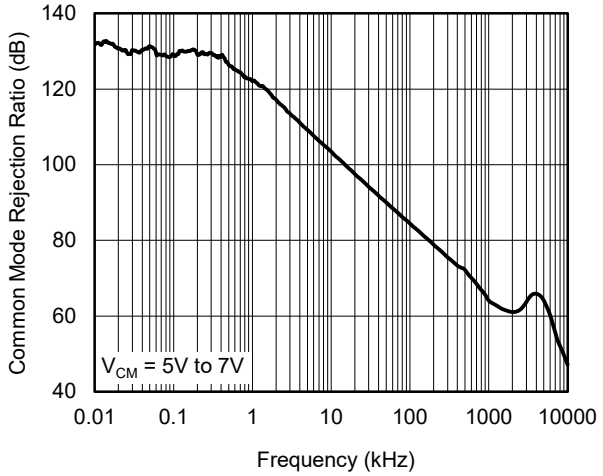


Open-Loop Gain and Phase vs. Frequency

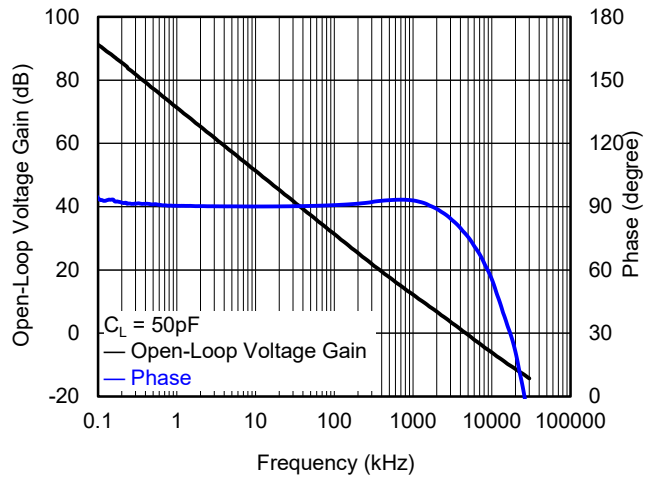


Input Voltage Noise Density vs. Frequency

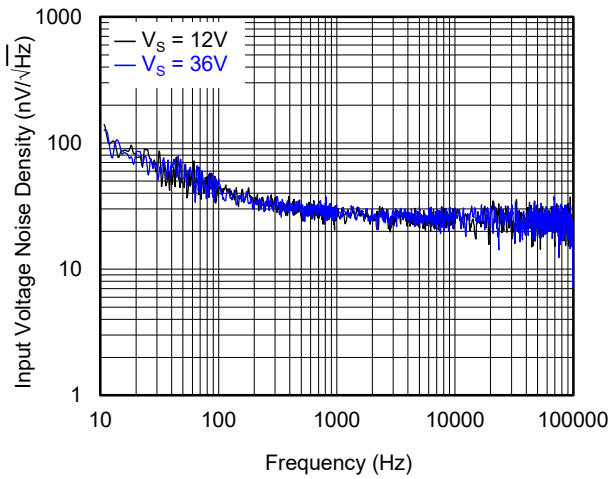


THD+N vs. Output Power

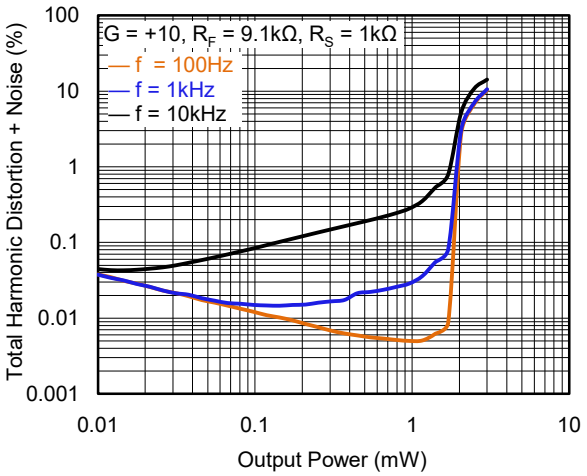


THD+N vs. Output Voltage

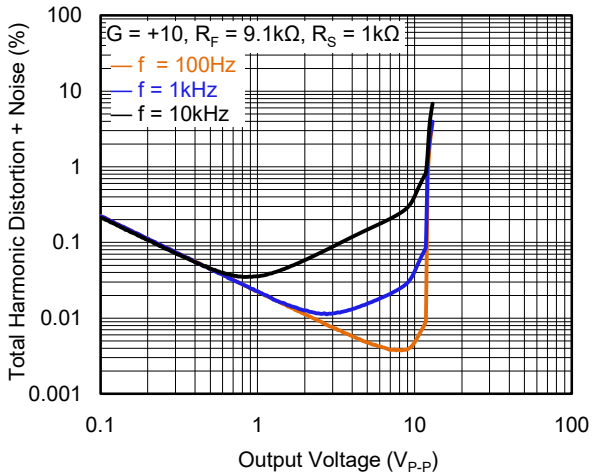

## TYPICAL PERFORMANCE CHARACTERISTICS (continued)

At $T_A$ = +25℃, $V_S$ = 12V, $V_{CM}$ = $V_S$/2, $R_L$ = 10kΩ to $V_S$/2, unless otherwise noted.

Large-Signal Step Response

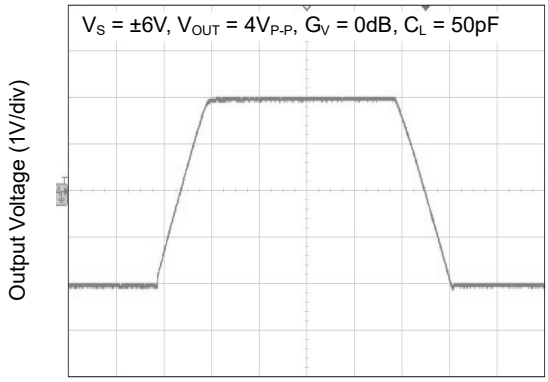


No Phase Reversal

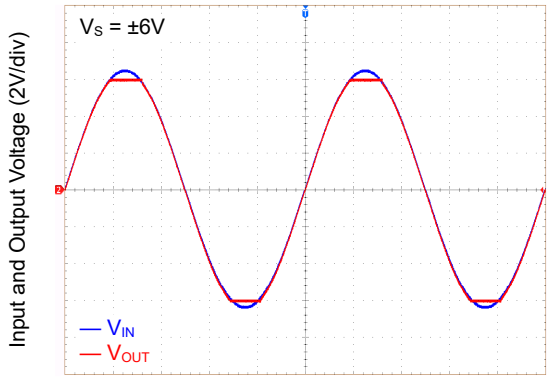

# APPLICATION INFORMATION

The SGM8431-1Q is a single CMOS operational amplifier featuring rail-to-rail input and output, high voltage, and high output drive. It operates within a wide voltage range of 4.5V to 36V, offers a high continuous output current of 200mA (MIN), and is available a TO-252-5 package that provides efficient heat dissipation. These characteristics make the SGM8431-1Q highly suitable for applications requiring both high operating voltage and high output current.

The SGM8431-1Q has output current limit and thermal shutdown (TSD) functions. It can be flexibly applied to a resolver excitation circuit. The following chapters provide more detailed descriptions.

## Current Limit

The SGM8431-1Q design has an output current limit function that activates when overload events happen. The output source and sink current limits are 350mA (TYP) and 300mA (TYP), respectively.

In application, the die temperature rises rapidly if the SGM8431-1Q is in current limitation for a long time. This situation may cause the chip to enter thermal shutdown. Therefore, it is necessary for users to evaluate whether the SGM8431-1Q's output current can meet the normal operating requirements when designing circuits.

## Thermal Shutdown

The SGM8431-1Q design has a thermal shutdown (TSD) function. The device will enter shutdown state when the internal junction temperature exceeds the shutdown threshold of +170℃. In thermal shutdown mode, the output current is cut off, and the output pin remains in a high impedance state. The SGM8431-1Q's thermal shutdown hysteresis temperature is 20℃. The device will automatically recover from the TSD mode once the junction temperature drops to +150℃.

In application, the SGM8431-1Q should be operated at a junction temperature below +150℃, and the thermal PAD should be connected to a larger ground plane to maximize the thermal performance.

## Resolver Excitation Circuit

The SGM8431-1Q's high continuous output current function makes it very suitable for resolver excitation circuit. Figure 2 shows the typical resolver excitation circuit using the SGM8431-1Q and the SGM8212-1Q. This circuit includes two SGM8212-1Qs: one is used to provide a bias voltage buffer and the other is used as an inverting amplifier to obtain a signal with phase reversal.

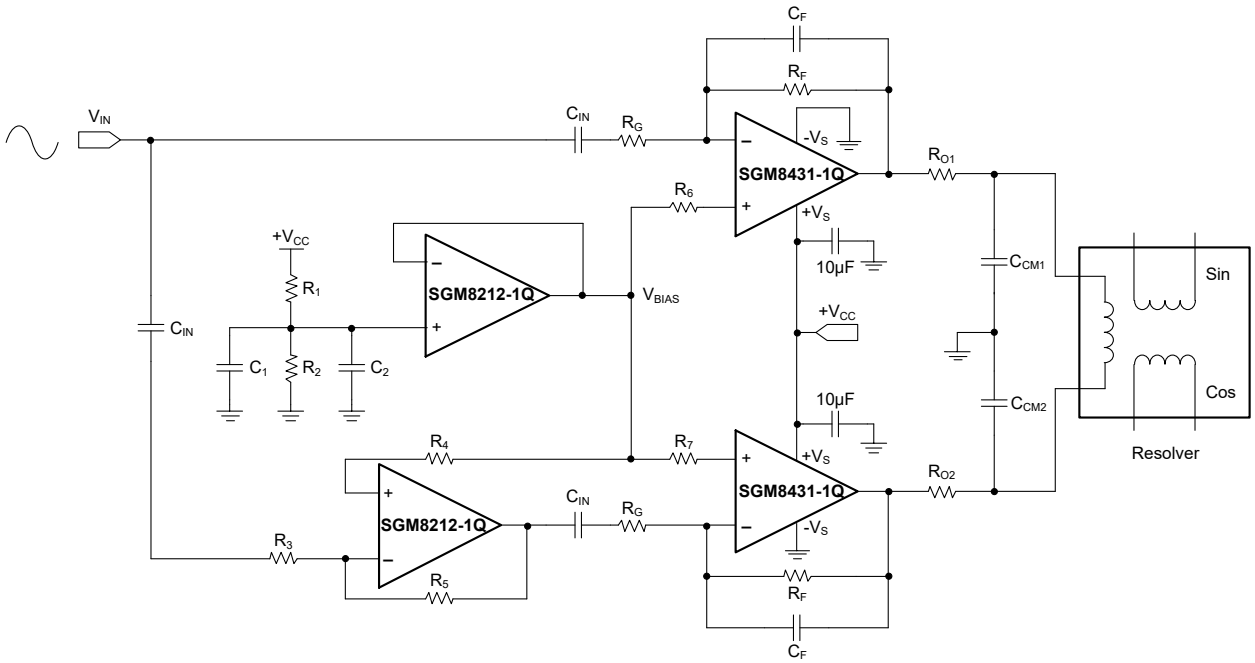


**Figure 2. Resolver Excitation Circuit with SGM8212-1Q**

## APPLICATION INFORMATION (continued)

Figure 3 shows a simplified resolver excitation circuit without SGM8212-1Q. Its bias voltage is provided by a resistance voltage divider, and the input signal is a differential signal with a phase difference of 180 degrees.

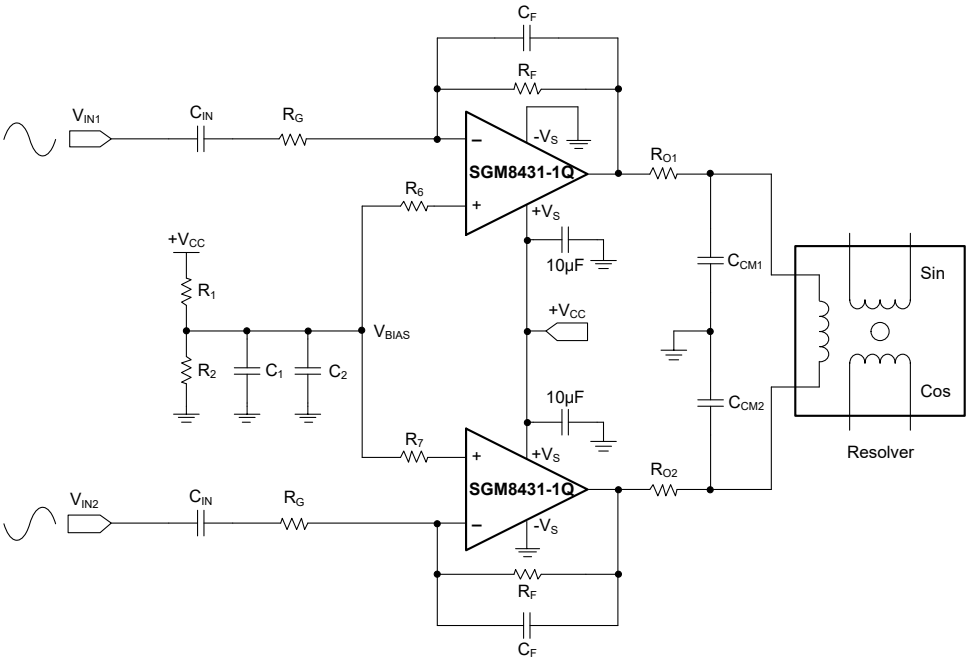


**Figure 3. Simplified Resolver Excitation Circuit without SGM8212-1Q**

Figure 4 shows a resolver excitation circuit with a pulse-width modulation (PWM) signal as the input. In this circuit, the SGM8212-1Q is used as a buffer and provides the bias voltage. Two input PWM signals from the I/O pins of the microcontroller are filtered by a two-stage RC filter circuit and converted to a sine wave signal for use as an excitation input.

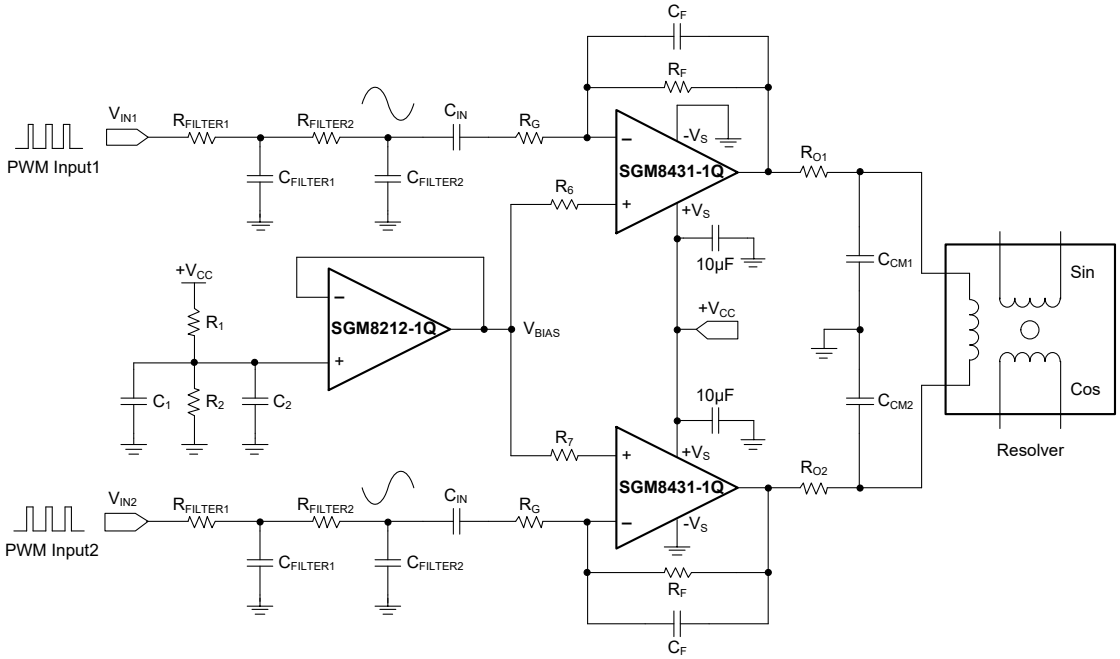


**Figure 4. Resolver Excitation Circuit from PWM Input Signal**

## APPLICATION INFORMATION (continued)

Figure 5 shows the actual output waveform from a resolver excitation circuit, and the key circuit parameter design is shown in Table 1.

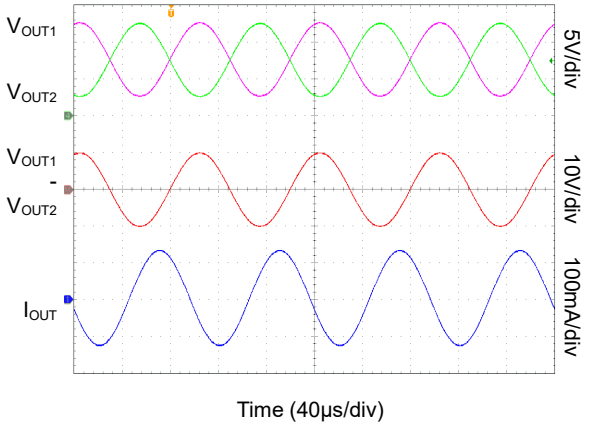


**Figure 5. Actual Output Waveform from Resolver Excitation Circuit (+$V_S$ = 15V, -$V_S$ = 0V, f = 10kHz)**

**Table 1. Design Parameters**

| Design Parameter | Example Value |
|---|---|
| Ambient Temperature Range | -40℃ to +125℃ |
| Supply Voltage | +15V |
| $V_{BIAS}$ | +7.5V from SGM8212-1Q |
| $R_O$ And $C_{CM}$ | 0Ω and 3nF |
| Gain | 2.5V/V |
| Input Signal Frequency | 10kHz |
| Resolver Excitation Input Voltage | $8V_{P-P}$ |
| Resolver Excitation Output Voltage | $20V_{P-P}$ |
| Output Current with Resolver Equivalent Circuit | $\pm130mA_{P-P}$ |

Figure 6 and Figure 7 respectively show the output voltage and the output current of the resolver excitation circuit.

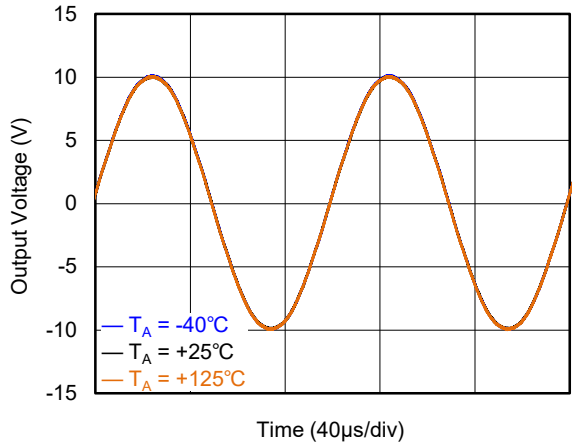


**Figure 6. Output Voltage of Resolver Excitation Circuit**

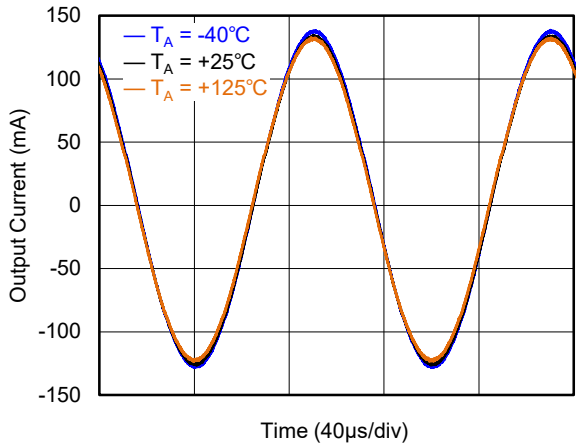


**Figure 7. Output Current of Resolver Excitation Circuit**

# REVISION HISTORY

NOTE: Page numbers for previous revisions may differ from page numbers in the current version.

| JULY 2024 – REV.A to REV.A.1 | Page |
|---|---|
| Updated Typical Performance Characteristics section | 9 |

| Changes from Original (JUNE 2024) to REV.A | Page |
|---|---|
| Changed from product preview to production data | All |

# PACKAGE OUTLINE DIMENSIONS

## TO-252-5

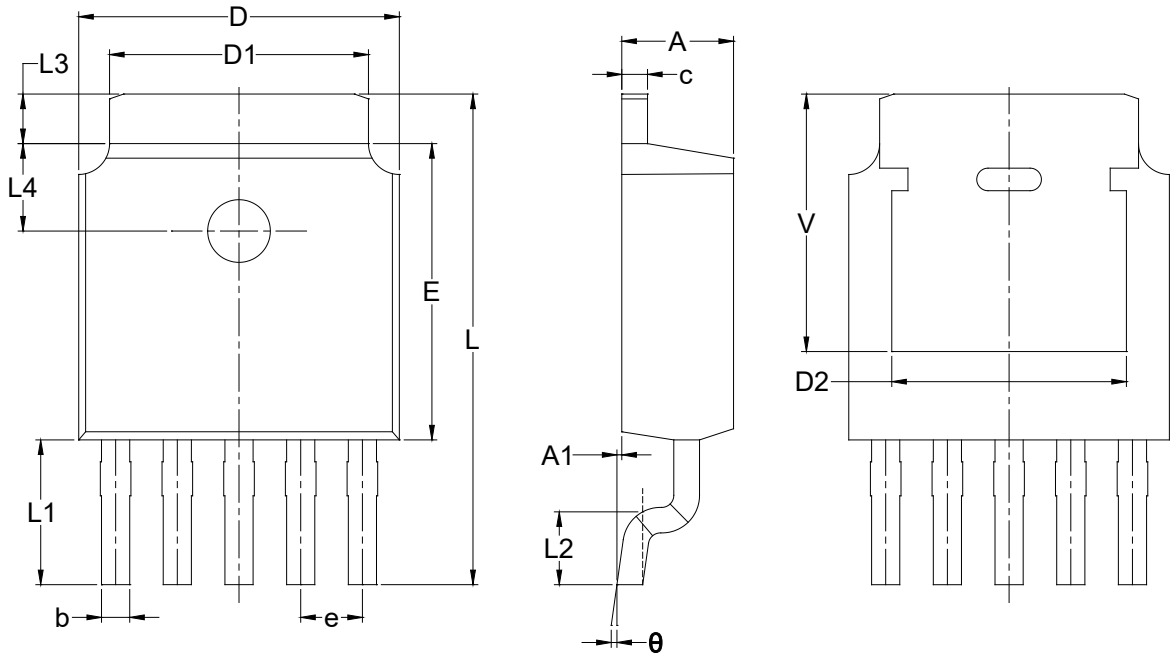


| Symbol | Dimensions In Millimeters | | |
|---|---|---|---|
| | MIN | MOD | MAX |
| A | 2.184 | - | 2.400 |
| A1 | 0.000 | - | 0.127 |
| b | 0.508 | - | 0.711 |
| c | 0.457 | - | 0.889 |
| D | 6.350 | - | 6.731 |
| D1 | 5.330 REF | | |
| D2 | 4.830 REF | | |
| E | 5.969 | - | 6.223 |
| e | 1.270 BSC | | |
| L | 9.398 | - | 10.414 |
| L1 | 2.980 REF | | |
| L2 | 1.397 | - | 1.778 |
| L3 | 1.020 REF | | |
| L4 | 1.800 REF | | |
| V | 5.300 REF | | |
| θ | 0° | - | 10° |

NOTES:
1. This drawing is subject to change without notice.
2. The dimensions do not include mold flashes, protrusions or gate burrs.

# TAPE AND REEL INFORMATION

## REEL DIMENSIONS

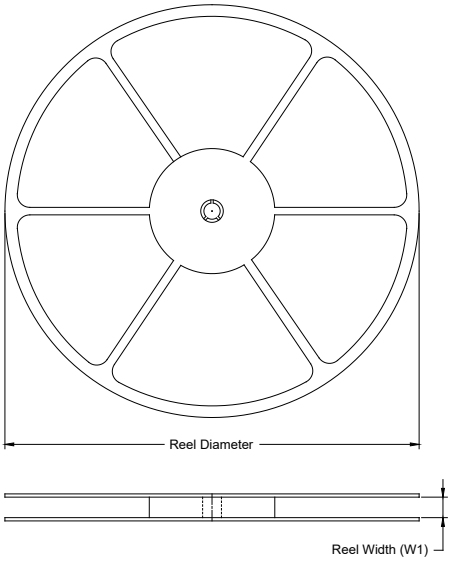


## TAPE DIMENSIONS

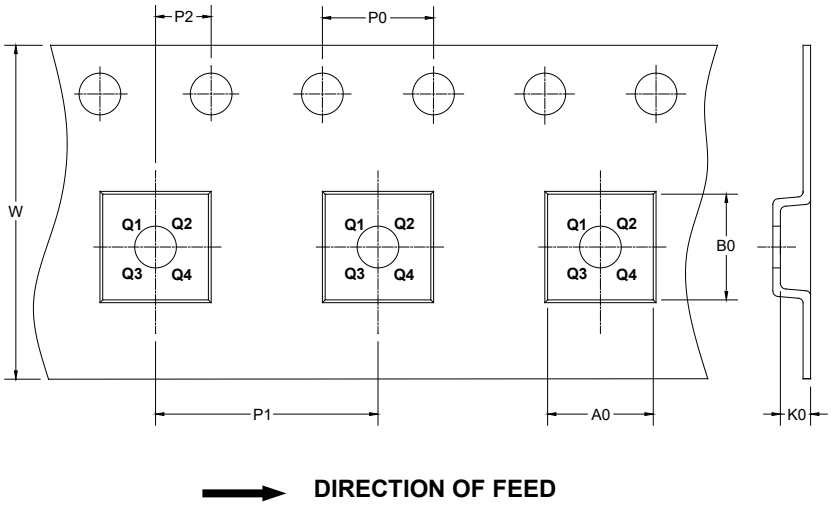


NOTE: The picture is only for reference. Please make the object as the standard.

## KEY PARAMETER LIST OF TAPE AND REEL

| Package Type | Reel Diameter | Reel Width W1 (mm) | A0 (mm) | B0 (mm) | K0 (mm) | P0 (mm) | P1 (mm) | P2 (mm) | W (mm) | Pin1 Quadrant |
|---|---|---|---|---|---|---|---|---|---|---|
| TO-252-5 | 13" | 16.4 | 6.90 | 10.50 | 2.85 | 4.0 | 8.0 | 2.0 | 16.0 | 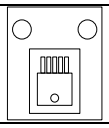 DD0001 |

## CARTON BOX DIMENSIONS

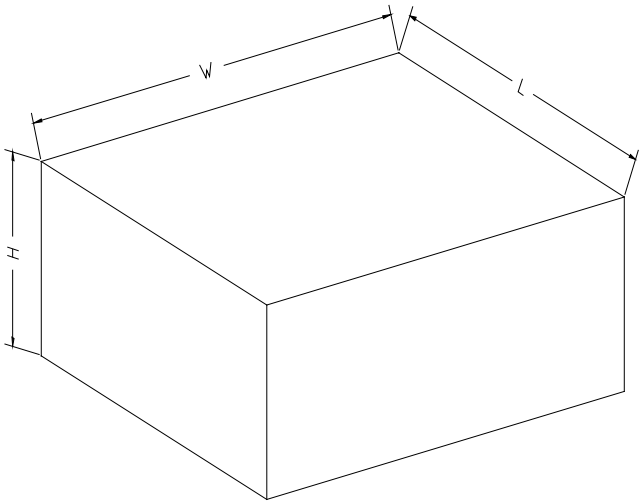


NOTE: The picture is only for reference. Please make the object as the standard.

## KEY PARAMETER LIST OF CARTON BOX

| Reel Type | Length (mm) | Width (mm) | Height (mm) | Pizza/Carton |
|---|---|---|---|---|
| 13″ | 386 | 280 | 370 | 5 |

DD0002